Proceedings of the 4th International Conference on Computing Innovation and Applied Physics
DOI: 10.54254/2753-8818/83/2025.20016

# *Envisioning Sailing Dynamics: Applying Computational Fluid Dynamics For Enhanced Sailing Performance*

**Hansen Chen**[1,a,*]

[1]*Lakefield College School, Lakefield, Ontario, Canada*
*a. hchen070430@gmail.com*
**corresponding author*

***Abstract:*** This study investigates how the design of sial affects sailboat performance by computational fluid dynamics (CFD). It assesses their effects on thrust and lateral forces by modeling an ILCA sailboat in SolidWorks and conducting CFD simulations with varying sail shapes, attack angles, and heeling angles. The simulations, compared against traditional performance benchmarks, aim to find the optimal sail shape and operation conditions that maximize aerodynamic efficiency. The research highlights the significant impact of sail shape and operation conditions on performance, offering a theoretical basis for enhancing sailing strategies. Through this integration of technology and tradition, the project seeks to improve sailing efficiency and understanding, providing a foundation for future maritime advancements and practical sailing improvements. This innovative approach promises to refine sailing techniques and contribute to the sport's scientific development.

***Keywords:*** Computational Fluid Dynamics, Aerodynamic Analysis, Optimal Sail Design, Aerodynamic Efficiency, Sailing Strategies.

## 1. Introduction

### 1.1. Background

Competitive sailing necessitates higher speeds and greater efficiency, as sailboats rely solely on wind for propulsion. Optimizing aerodynamic efficiency and operational conditions, such as sail trim and heeling angle, enhances performance. Traditionally, sailing knowledge and strategies are conveyed by coaches or experienced sailors, but these strategies often lack the flexibility to adapt to varying environmental conditions [1]. This study investigates the effects of sail shape, heeling angle, and angle of attack on sailing performance to determine optimal operational conditions and assess potential improvements to existing strategies [2].

### 1.2. Literature Review

Much previous research had dedicated to improve the performance of sailboat. Ma Yong explores sail wings' aerodynamic properties through numerical simulations and wind tunnel experiments [3]. This research underscores the critical role of computational parameters and turbulence models in obtaining precise simulations. It demonstrates that streamlined masts can notably reduce drag and boost lift, thereby enhancing sailboat performance. Additionally, the study advises using sails with

© 2025 The Authors. This is an open access article distributed under the terms of the Creative Commons Attribution License 4.0 (https://creativecommons.org/licenses/by/4.0/).

DOI: 10.54254/2753-8818/83/2025.20016

larger camber in light winds and smaller camber in strong winds to optimize stability and speed. Ma's work offers valuable insights into competitive sailing and sailboat design, contributing to more efficient and sustainable sailing practices. In another research, Rickard Lindstrand Levin and Lars Larsson from Chalmers University of Technology introduce an innovative approach to Velocity Prediction Programs (VPPs) by integrating Computational Fluid Dynamics (CFD) directly into the VPP framework [4]. This method enables simultaneous solving of flow and rigid body equations, enhancing the accuracy of performance predictions. The study, which demonstrates this technique on both a dinghy and a high-performance racing yacht, aims to optimize sailing strategies and designs for better efficiency and sustainability. In addition, Vincent G. Chapin et al. introduce ADONF, a new numerical simulation platform for analyzing, designing, and optimizing sail configurations using Reynolds Averaged Navier-Stokes (RANS) simulations. Developed at the Institut Supérieur de l'Aéronautique et de l'Espace (ISAE) in Toulouse, France, ADONF automates mesh generation and integrates RANS simulations to improve the aerodynamic performance of sails [7]. The platform aims to provide precise, robust, high-performance sail designs that benefit competitive sailing by optimizing sail shape and trim in various conditions. The research highlights the importance of viscous CFD for accurate sail design and presents several case studies demonstrating ADONF's capabilities in optimizing both single and interacting sail configurations. Most recently, Mikka Pennanen et al., at the 11th ISEA conference in 2016, explored optimizing Laser dinghy performance using an Inverse Velocity Prediction Program (IVPP) integrated with CFD results. [9] The authors aim to identify the optimal sailor position regarding heel and trim angles to enhance performance. Their method involves systematic variation and validation of parameters through CFD simulations and tank tests, revealing that minor adjustments in sailor position can significantly impact speed and resistance. The study provides a comprehensive analysis that can be applied to competitive sailing strategies and sailboat design methodologies.

### 1.3. The scope of current Research

This study aims to advance the understanding of sailboat performance by applying CFD to analyze the aerodynamic effects of varying sail shapes, attack angles, and heeling angles. Unlike prior research that has largely focused on general performance metrics or isolated aspects of sailing dynamics, this paper comprehensively examines these critical variables within a single, integrated framework. By modeling an ILCA sailboat in SolidWorks and simulating different sail configurations, this research seeks to pinpoint the optimal conditions for maximizing aerodynamic efficiency. Key areas of investigation include the influence of sail shape on thrust coefficient ($C_T$) and lift coefficient ($C_L$), with detailed simulations comparing pentagon, rectangle, and triangle sail designs. The study also explores the effects of attack angles on aerodynamic performance, identifying the angles that yield the highest $C_T/C_L$ ratios and, thus, the greatest efficiency in both downwind and upwind scenarios. Additionally, the research examines how varying heeling angles impact these performance metrics, particularly focusing on the trade-offs between thrust and lateral forces as the boat heels during close-hauled conditions.

## 2. Methodology

Table 1: Nomenclature

| | |
|---|---|
| α | heeling angle on a sailboat |
| $u_i$ | the velocity components |
| ρ | density |
| p | pressure |

DOI: 10.54254/2753-8818/83/2025.20016

Table 1: (continued).

| | |
|---|---|
| $\nu_T$ | eddy viscosity |
| $F_d$ | drag force |
| $F_l$ | lift force |
| $C_d$ | drag coefficient |
| $C_l$ | lift coefficient |
| $\theta$ | angle of attack |

In this study, CFD software is used to simulate the turbulent flow over the sails and the boat. The governing equation includes the mass conservation [5],

$$\frac{\partial u_i}{\partial x_i} = 0 \tag{1}$$

And the Navier-Stokes equations [5]:

$$\frac{\partial u_i}{\partial t} + u_j \frac{\partial u_i}{\partial x_j} = -\frac{1}{\rho}\frac{\partial p}{\partial x_i} + (\nu + \nu_T)\frac{\partial^2 u_i}{\partial {x_j}^2} + F_i \tag{2}$$

here, $u_i = (u, v, w)$ is the velocity components in three directions, $p$ is the pressure, $\nu = \mu/\rho$ is the kinematic viscosity, $\nu_T$ is the turbulent viscosity, which the turbulent model determines, $\rho$ is the density of the air, and $F_i$ is the forces from the car to the flow fields, including the drag and lift forces.

In addition to the governing equation, the drag/lift coefficients are used to evaluate the performance of the sailboat. The drag coefficient is a dimensionless number used to quantify an object's resistance or drag in a fluid environment. A lower drag coefficient indicates that an object experiences less aerodynamic or hydrodynamic drag, making it more efficient in moving through the fluid. The drag coefficient reads [5]:

$$C_d = \frac{2\mathrm{D}}{\rho u_1^2 A} \tag{3}$$

here, $C_d$ stands for drag coefficient for the entire sailboat, $D$ stands for the drag force, and $u_1$ is the streamwise wind velocity, $A$ is the frontal area of the boat. The lift coefficient ($C_l$) is defined with a similar concept, and the difference is that it considers the forces in the vertical direction, which can be expressed as [5]

$$C_l = \frac{2L}{\rho u_1^2 A} \tag{4}$$

here, $L$ is the lift force exerted on the sailboat body.

## 3. Results And Discussion

### 3.1. The effects of attack angles

In this section, we analyze the impact of attack angles on the aerodynamic performance of a sailboat. The attack angle, defined as the angle between an airfoil's chord and the airstream's direction, plays a crucial role in determining the aerodynamic forces acting on the sail. This analysis aims to explore how different attack angles influence the thrust ($C_T$) and lateral force coefficients ($C_L$) generated by the sail and to establish a connection between these aerodynamic coefficients and the flow characteristics visualized through velocity and pressure contours. After the simulations, data was collected from variables representing different points of sail and corresponding attack angles.

Figure 1 represents one of the fundamental sailing knowledge areas of the “point of sail” graph that indicates the idealistic sail trim and sailing directions under specific wind conditions. Point of

DOI: 10.54254/2753-8818/83/2025.20016

sail is a sailing term that describes the boat's direction relative to the wind, while the attack angle is a more empirical measure, referring specifically to the angle between the sail's chord line and the oncoming wind direction, which directly affects the sail's aerodynamic performance. Then, aerodynamic coefficients were calculated, and the $C_T/C_L$ ratio for various angles are shown in Figure 2. The ratio is defined as the Thrust Coefficient, $C_T$, divided by the Lateral Force Coefficient, $C_L$.

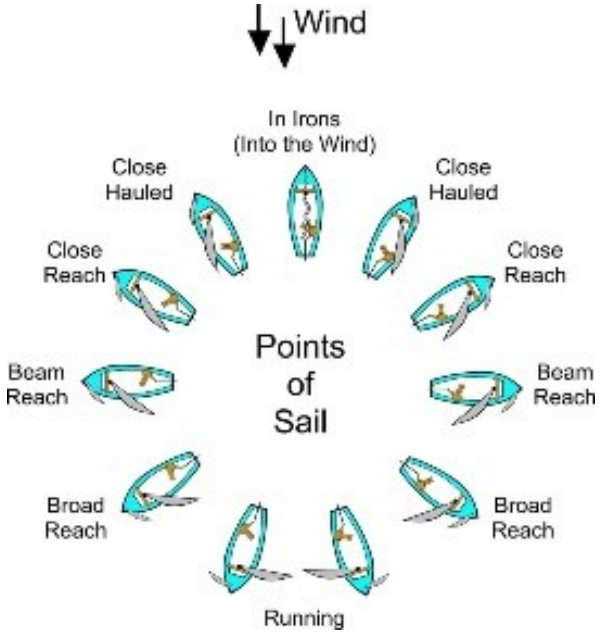


Figure 1: Schematic figure of point of sail [1]

Figure 2(a) presents the relationship between the coefficient of thrust ($C_T$) and the attack angle. The results show that a 90-degree attack angle, corresponding to a tailwind scenario, yields the highest $C_T$ value, indicating the most significant forward thrust. Similarly, Figure 2(b) illustrates the lift coefficient ($C_L$) as a function of the attack angle, with the highest lift occurring at intermediate angles. The $C_T/C_L$ ratio, shown in Figure 2(c), highlights that the highest aerodynamic efficiency is achieved at the 90-degree attack angle.

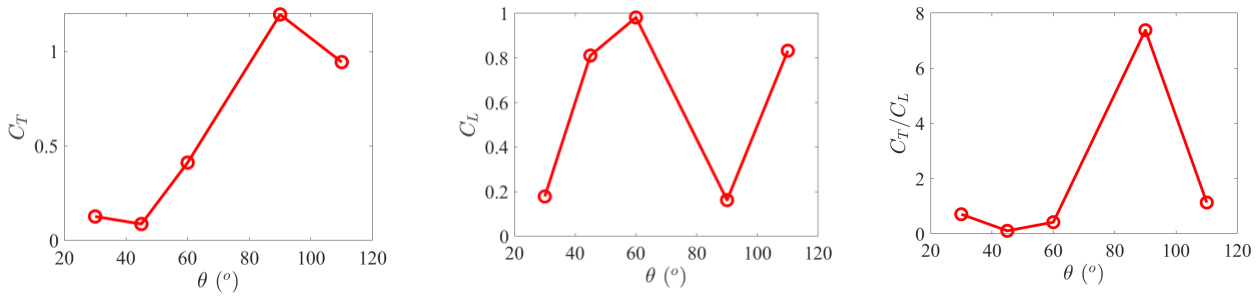


Figure 2: (a-c) $C_T$, $C_L$ and $C_T/C_L$ values with respect to attack angles

The surface pressure plots (Figure 3) and pressure plots (Figure 4) were collected through the flow simulation feature, intending to visualize the forces and pressures that act on the sail, which is helpful in determining the factors that affect the aerodynamic efficiency of a sailboat in different attack angles. Figure 3 shows sail surface pressure contour plots at different attack angles of 30, 45, 60 and 90 degrees. From the figure, it can be observed that at a 90-degree attack angle, there is a large high-pressure area on the windward side, as seen in the pressure contours. This high-pressure region

DOI: 10.54254/2753-8818/83/2025.20016

corresponds with the maximum $C_T$ observed, confirming that the tailwind condition optimizes thrust by maintaining favorable pressure distribution. Figure 4 displays an increasing trend in high-pressure areas through the boat from 30 to 60 degrees, while also shows a decrease in the high-pressure areas from 60 to 90 degrees.

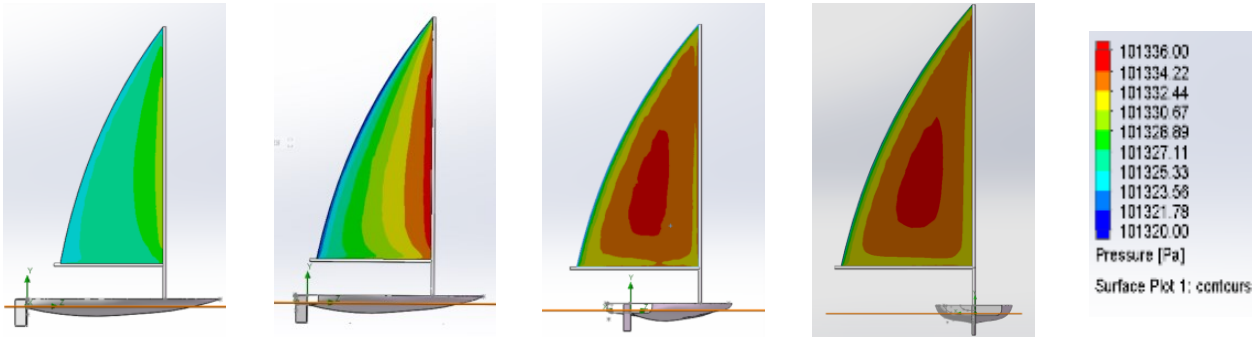


Figure 3: Sail surface pressure contour at different attack angles

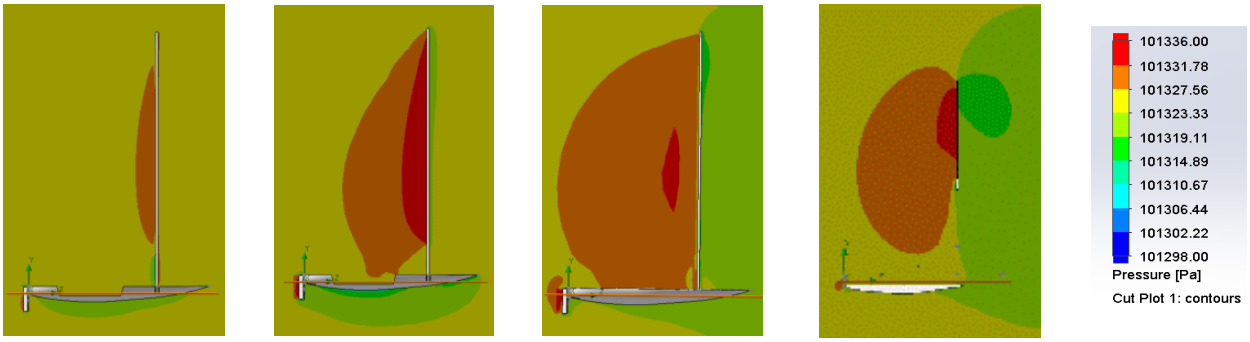


Figure 4: Pressure distribution contour through the hull at different attack angles

## 3.2. The effects of heeling angle

In this section, the effects of varying heeling angles on the aerodynamic performance of a sailboat are examined. The heeling angle, defined as the tilt of the boat to one side due to wind pressure on the sails, plays a crucial role in balancing thrust and lateral forces. By analyzing different heeling angles in both downwind and upwind conditions, we aim to determine the optimal heeling angles that maximize the sailboat's aerodynamic efficiency, as indicated by the $C_T/C_L$ ratio, and to understand how these angles influence the flow dynamics and pressure distribution on the sail. These visualizations of the forces and pressures acting on the sail were instrumental in determining the factors affecting the aerodynamic efficiency of a sailboat at different heeling angles.

DOI: 10.54254/2753-8818/83/2025.20016

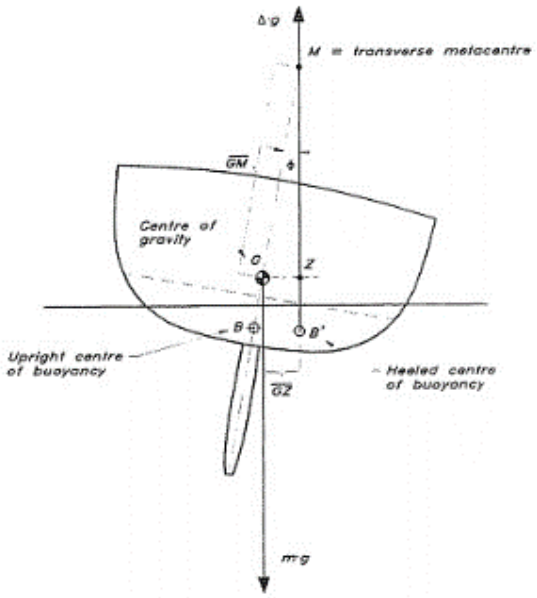


Figure 5: Demonstrative graph of heeling angle

### 3.2.1. Heeling Angles and their effects on a downwind point of sail

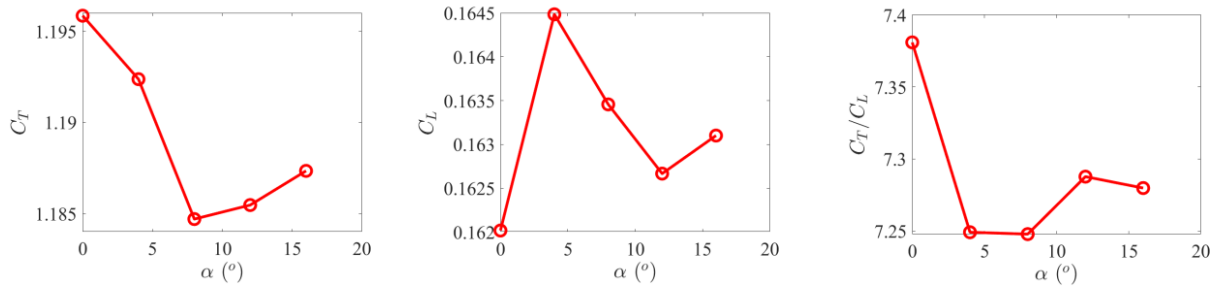


Figure 6: (a-c) $C_T$, $C_L$ and $C_T/C_L$ value with respect to different heeling angles (downwind)

In analyzing the effects of heeling angles during downwind sailing (attack angle of 90 degrees), it was observed that maintaining a 0-degree heeling angle yields the highest aerodynamic efficiency, as indicated by the $C_T/C_L$ ratio (figure 6). This finding challenges the conventional wisdom advocated by coaches, who suggest an 8-degree windward heel to enhance thrust in downwind conditions, and proved by previous researchers, such as Pennanen et al. However, our simulations, which varied heeling angles while controlling other variables, reveal that a perfectly balanced heeling angle of 0 degrees not only produces the highest $C_T/C_L$ ratio (Figure 6c) but also consistently results in the largest coefficient of thrust ($C_T$) and the smallest coefficient of lift ($C_L$). Although surface pressure distributions across different heeling angles (Figure 7) showed some similarities, the superior performance at 0 degrees underscores the aerodynamic advantage of maintaining a balanced heeling angle during downwind sailing.

DOI: 10.54254/2753-8818/83/2025.20016

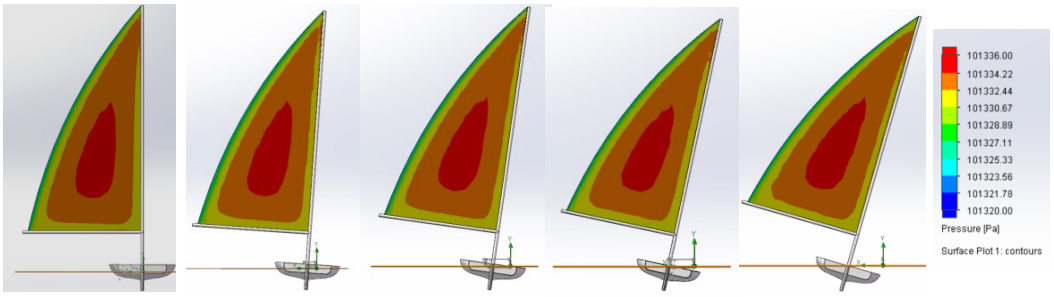


Figure 7: Sail surface pressure plots at different heeling angles (downwind)

### 3.2.2. Heeling Angles and their effects on a closed-hauled point of sail

In examining the effects of heeling angles during close-hauled (upwind) sailing, we analyzed the sailboat's aerodynamic performance across various heeling angles at an attack angle of 30 degrees. The results, depicted in the $C_T$ vs. Heeling Angle (θ) graph (Figure 8a), show that the coefficient of thrust ($C_T$) increases consistently with the heeling angle, reaching its peak at approximately 15 degrees. Meanwhile, the $C_L$ vs. Heeling Angle (θ) graph (Figure 8b) reveals some fluctuations, with the highest lateral force coefficient ($C_L$) also occurring at 15 degrees. However, the $C_T/C_L$ Ratio vs. Heeling Angle (θ) graph (Figure 8c) illustrates that although the $C_T/C_L$ ratio improves up to about 10 degrees, it then stabilizes, and further increases in the heeling angle lead to greater thrust at the expense of excessive lateral force. This trade-off undermines overall performance. These findings suggest that while a heeling angle of up to 15 degrees may enhance both thrust and lift, the optimal heeling angle for upwind sailing, in terms of aerodynamic efficiency, is around 10 degrees, where a better balance between thrust and lift is achieved, optimizing performance in close-hauled conditions.

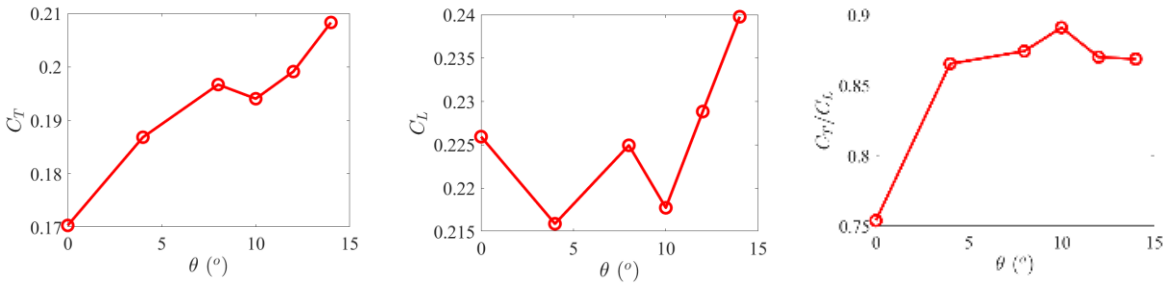


Figure 8: (a-c) $C_T$, $C_L$ and $C_T/C_L$ value with respect to different heeling angles (upwind/closed hauled)

## 3.3. Sail Shapes and their Effects

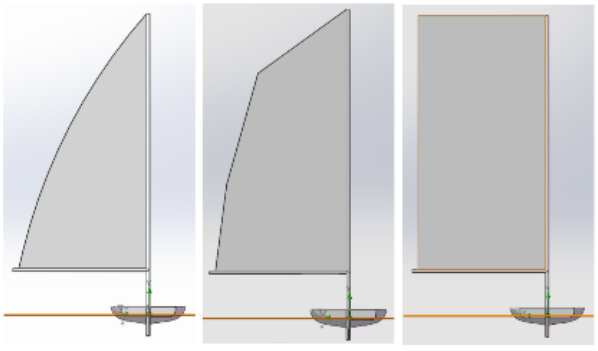

Figure 9: (a-c) Sailboat models with differently shaped sails

DOI: 10.54254/2753-8818/83/2025.20016

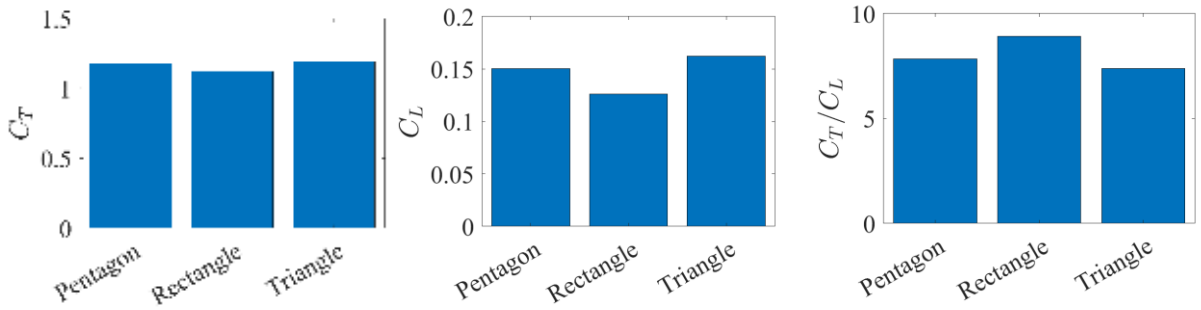


Figure 10: (a-c) $C_T$, $C_L$ and $C_T/C_L$ value with respect to differently shaped sails

In examining the effects of different sail shapes on a sailboat's aerodynamic performance, simulations were conducted across a range of sail shapes—specifically pentagon, rectangle, and triangle configurations. The analysis focused on key aerodynamic coefficients, with the results depicted in the $C_T$ vs. Sail Shape graph (Figure 10a), showing that the pentagon sail produces the highest coefficient of thrust ($C_T$), indicating its superior capability in generating forward propulsion. Meanwhile, the $C_L$ vs. Sail Shape graph (Figure 10b) reveals that the rectangle sail achieves the highest coefficient of lift ($C_L$), surpassing both the pentagon and triangle shapes. The $C_T/C_L$ Ratio vs. Sail Shape graph (Figure 10c) further illustrates that the rectangle sail provides the best overall aerodynamic efficiency, with the highest $C_T/C_L$ ratio, demonstrating its optimal balance between thrust and lift.

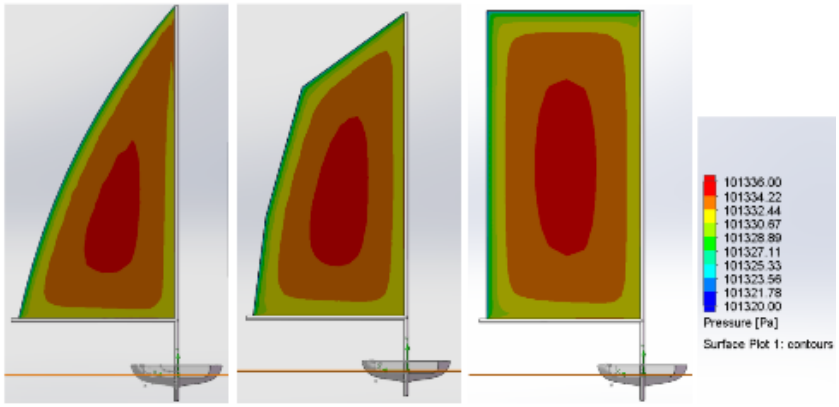


Figure 11: Surface pressure contour on differently shaped sails (Downwind)

To further analyze the aerodynamic performance of the different sail shapes, velocity contours and surface pressure plots were generated (Figures 11 and 12, respectively). The velocity contour plots reveal that the airflow around the rectangle sail is smoother and more uniform, contributing to its superior aerodynamic efficiency. In contrast, the pentagon and triangle sails exhibit more turbulence and less favorable flow patterns. The surface pressure plots show a higher-pressure concentration on the windward side of the rectangle sail, which correlates with its higher lift coefficient ($C_L$). The rectangle sail's balanced pressure distribution and efficient flow dynamics explain its higher $C_T/C_L$ ratio, as the sail maintains a strong thrust without generating excessive lateral forces. These visualizations effectively link the observed aerodynamic coefficients with the underlying flow behaviors, reinforcing the conclusion that the rectangle sail offers the best overall performance.

DOI: 10.54254/2753-8818/83/2025.20016

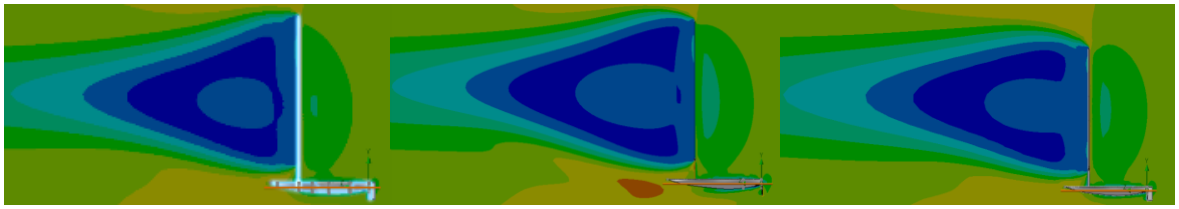

Figure 12: Velocity contour across the differently shaped sails

## 4. Conclusion

This study employed Computational Fluid Dynamics (CFD) to analyze the effects of sail shapes, attack angles, and heeling angles on the aerodynamic performance of an ILCA sailboat. A series of simulations were conducted under each of the three categories to determine the optimal configurations for maximizing aerodynamic efficiency. The findings from these experiments are summarized as follows: in the attack angle category, sailing downwind has the highest $C_T/C_L$ ratio. Therefore, sailing on a tailwind as much as possible is recommended for recreational sailing. In the context of competitive racing, staying on a complete tailwind point of sail during a downwind leg is recommended. In the sail shape category, when sailing downwind, the triangular sail provides the highest thrust coefficient, while the rectangular sail obtains the highest $C_T/C_L$ ratio. The smaller low-speed area in front of the sail is a potential explanation for the rectangular sail being the most efficient, as established in the $C_T/C_L$ graph for different sail shapes. However, no specific part has been invented that can hold up a rectangular sail without sacrificing the sail's weight. Therefore, the most common sail shape we see today is still triangular. In the heeling angle category, the heeling angle of 0 degrees has the highest $C_T/C_L$ ratio while sailing downwind. Therefore, it is recommended to stay balanced in a downwind situation.

## References


[1] *American Sailing Association (2024). Where are we going: understanding points of sail. Retrieved April 28, 2024, from https://asa.com/news/2022/12/06/points-of-sail/*

[2] *Late Sail. (2019). Ten tips for Eco-Friendly Sailing. https://www.latesail.com/en-uk/blog/2019/07/23/10-tips-for-sustainable-sailing/*

[3] *Ma, Yong. "Numerical Simulation and Experimental Study on the Aerodynamic Performance of the Sail." Wuhan University of Technology Dissertation, Apr. 2009.*

[4] *Rickard Lindstrand Levin, and Lars Larsson. "Sailing Yacht Performance Prediction Based on Coupled CFD and Rigid Body Dynamics in 6 Degrees of Freedom." Ocean Engineering, vol.144,1 Nov. 2017,pp. 362–373, https://doi.org/10.1016/j.oceaneng.2017.09.052.*

[5] *Solid Solutions. (2017). Set your fluids free. https://www.solidsolutions.co.uk/blog/2017/10/set-your-fluids-free/*

[6] *University of Brighton. (2024). Max Male's Blog for digital. from https://blogs.brighton.ac.uk/maxmalepd/cad-project/*

[7] *Vincent Chapin, Romaric Neyhousser, Guillaume Dulliand, Patrick Chassaing. Design optimization of interacting sails through viscous cfd. International Conference on Innovation in High Performance Sailing Yachts, RINA, May 2008, Lorient, France.*

[8] *Robin, Pierre, Leroyer, Alban, de Prémorel, David, and Jeroen Wackers. "Tackling Modern Sailing Challenges with a CFD-based Dynamic VPP." J Sailing Technol 9 (2024): 1–18. doi: https://doi.org/10.5957/jst/2024.9.1.1*

[9] *Mikka Pennanen, et al. "Numerical Prediction of the Best Heel and Trim of a Laser Dinghy." Procedia Engineering, vol. 147, 1 Jan. 2016, pp. 336–341, https://doi.org/10.1016/j.proeng.2016.06.304.*