Proceedings of the 4th International Conference on Computing Innovation and Applied Physics
DOI: 10.54254/2753-8818/2025.23340

Compactly Foldable Chair Based on Kirigami and Bennett Linkage

Zhanyue Gao[1*], Shuoning Chen[2], Kunning Liu[3], Yanlin Zhu[4]

[1] *Department of Physics and Astronomy, University of Manchester, Manchester, UK*
[2] *Engineering Department, University College London, London, UK*
[3] *Dulwich International High School,Su Zhou, China*
[4] *Haileybury School, Hertford, UK*
[*] *Corresponding Author. Email: zhanyue.gao@student.manchester.ac.uk*

Abstract: This paper introduces an innovative design for a foldable chair that can be compactly folded into a walking stick, aiming to assist the growing elderly population. The chair utilizes a modified compact-folding Bennett Linkage as its framework, ensuring a single degree of freedom for ease of folding. The surface is crafted from thick-panel folding inspired by kirigami, providing a rigid and comfortable sitting surface with a backrest. The design addresses the lack of portable seating options with back support in the market, ensuring both comfort and portability. The paper discusses the mechanisms involved in the chair's folding process, the design of the flat foldable thick-panel chair surface, and the connection between the surface and frame. Additionally, the paper presents force simulations to validate the structural integrity of the chair frame made from wood and 1060 aluminum alloy. The study concludes that the proposed design offers a wearable, foldable chair solution with improved load-bearing capabilities and reduced degrees of freedom for stability and ease of use.

Keywords: Foldable structure, Bennett Linkage, Thick-panel folding, Kirigami

1. Introduction

Bennett Linkage is a three-dimensional 4 bar over-constrained linkage. It has one degree of freedom, which makes it applicable to many motion structures such as tents or extendable roofs. One of the main characteristics is that Bennett linkage is a over-constrained structure with one degree of freedom. This makes it easy to open and close a structure based on Bennett linkage. Kirigami has had a long history. However, it is not limited to paper or other soft materials that have near-zero thickness. Rigid thick panel folding can gain a lot of inspiration from origami and kirigami. Stem from these inspiration, other constraints, such as requiring the panel to have one degree of freedom or same thickness, are added to produce different designs for different use, such as the solar panels.

These techniques and ideas can be apply to not only cutting-edge technologies such as solar panels on spacecraft but also solve problems that is close-to-life, such as the aging problem. Nowadays, the aging problem of the population is becoming more and more severe. In China, benefited by better living conditions and medical care, population which are over 60 is growing. In 2000, the percentage

© 2025 The Authors. This is an open access article distributed under the terms of the Creative Commons Attribution License 4.0 (https://creativecommons.org/licenses/by/4.0/).

DOI: 10.54254/2753-8818/2025.23340

of elder people has already gone above 7% [1]. This number grew to exceeding 14% in 2021, and it is estimated that in 2050 the percentage will become 30% [1]. Thus, walking sticks and portable chairs become more and more demanding in the market. However, there haven't a product in market that can combine those 2 together. Also, little foldable chair with rigid chair surface has a backrest, while backrest is an important structure to insure healthy and comfortable sitting posture since its presence can affect the spine of human body.

Research has shown that the spine of the upper body maintains the most natural posture, forming an ideal "S" curve. The pressure on the intervertebral discs and spine is evenly distributed, making the lumbar spine less prone to fatigue. However, when facing a chair without a backrest, there are usually two sitting postures: sitting straight or hunched. The consequence of the former is that the surrounding muscles and ligaments will also be tightened, which can cause chronic pain over time. The post-rior concavity of the spine exhibited by the latter will lead to the same muscle fatigue and lower back pain. Therefore, having a backrest is important for a good chair structure.

Currently, there are two main types of foldable chairs on the market. The first type is often seen in lecture halls. This type is designed for long-time sitting which thus has a backrest. Research has shown that, while sitting on this type of chair, the spine of the upper body maintains the most natural posture, forming an ideal "S" curve. The pressure on the intervertebral discs and spine is evenly distributed, making the lumbar spine less prone to fatigue [2]. However, it is usually not very portable since it can not be folded very compactly.



Figure 1: Unfolded State of a Type one chair [3]

The second type is portable. However, since it is designed for short-term sitting, it usually does not have a backrest,as shown in fig 3. The consequence is that it can cause chronic pain over time [2].

This has become a problem for the elderly as it is hard for them to choose a chair when going out. Thus, a compactly foldable chair with backrest is introduced in this paper. The chair could be folded into a sticklike shape and would therefore be wearable for the elders. Inspired by the concept of kirigami and Bennett Linkage, a foldable chair is designed to solve the problems above, fulfilling the needs of the elders.

2. Chair Frame with One Degree of Freedom

DOI: 10.54254/2753-8818/2025.23340

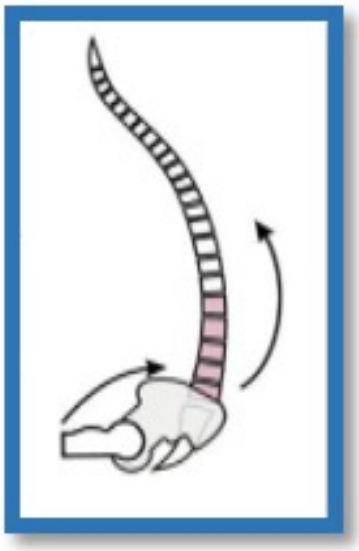

Figure 2: “S” shape [2]



Figure 3: Unfolded State of a Type two chair [4]

2.1. Framework Overview

Two designs of chair frame are introduced in this part. The designs are all made by wooden bars of unique shape and revolute joints between them. The shape of wooden bar is defined as a square pillar with oblique surface at both ends. The oblique surfaces are cut at angle 45 degree to the surface formed by the crosslines of the surfaces at two ends. Three varied sizes of wooden bar are used, each

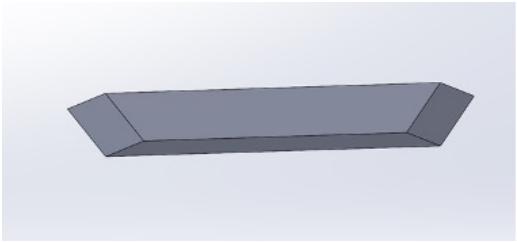

Figure 4: Shape of Wooden Bar

DOI: 10.54254/2753-8818/2025.23340

with length $L = 400mm$, $L = 200mm$, $L = 20mm$, respectively.

Design A contains 2 long bars, 6 medium bars and 4 short bars. Design B contains 8 medium bars, 4 shorter bars and 2 chips for connection.

The design of chair framework is based on an alternative form of Bennett linkage, which have only one degree of freedom (DoF). Three different mechanisms are used to connect them. The overall structure is over-constrained, which has only one DoF. The folding procedure of the chair frame based



Figure 5: Design A

on design A is shown in figure 5. There are two mechanisms used on it: Mechanism I and Mechanism II. Design B, on the other hand, uses Menchasnism I,II and III.

2.2. Detailed Mechanisms

2.2.1. Mechanism I — Alternative form of Bennett linkage with designed length

Mechanism I is used as the main concept of the chair frame, which takes its advantage of compact folding. It allows the chair to be folded into the shape like a stick. The idea of Mechanism I comes from an alternative form of Bennett linkage, which could be folded compactly [5].

Bennett linkage is a type of 3D structure that includes 4 bars and 4 revolute joints. The particularity of this structure is that it is an overconstrained structure with one DoF. This important characteristic allows it to be folded or locked very easily. A typical Bennett linkage in compact folding form is defined by three parameters, which are indicated by figure 8

DOI: 10.54254/2753-8818/2025.23340



Figure 6: Design B

In fig 8 (a), the xy coordinate system is generated by a method introduced in reference [5], in which each bar is analysed with the eight vertices on it.

$$\frac{L}{l} = 2\sqrt{\frac{1 - cos(2\omega)cos(2\lambda)}{1 - cos(4\omega)}} \tag{1}$$

Equation (1) states relationship between the parameters could be used to adapt the mechanism onto the chair frame. In this equation, ω,λ,L each refers to the angle or length defined previously, while l refers to the length of imaginary Bennett linkage that the structure stands for [5].

This equation enables us to design the length for the chair. By keeping ω,λ constants, the ratio between L and l would be a constant. That means by how much L is changed, l would change accordingly. Thus, if the length of 4 bars in a Mechanism I Bennett linkage are changed at the same time by same degree, the mechanism is not broken. This makes it possible to make Mechanism I Bennett linkage at different scale. Thus, ω,λ were both determined to be 45 degrees, which could be produced easily. The difficulty to use Bennett linkages in regular structures, however, exists due to the hazard with connection. In order to keep its one DoF, two Bennett linkages must be connected by a smaller Bennett linkage [6].

2.2.2. Mechanism II: Planar linkage as connection

Planar linkages are 2-dimensional 4 bar linkages. In cases of planar linkages, the connection problem could be easily overcome, as the Z axis of joints are parallel to each other. For the form of Bennett linkage used in this design, the connection is also solved via planar linkage. Since on the end of each Bennett linkage based on Mechanism I, the Z axel of revolute joints is parallel to the edges of the bar, if the edges are also made to become revolute joints with another bar, a planar linkage is formed.

Note that even for planar linkages, Mechanism II is a special case. The four edges of Mechanism II are equal. This characteristic makes it a Bennett Linkage, which has only one DoF.

DOI: 10.54254/2753-8818/2025.23340

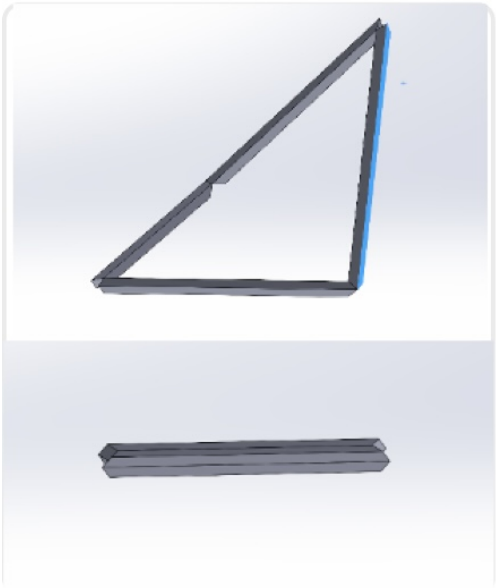

Figure 7: Mechanism I

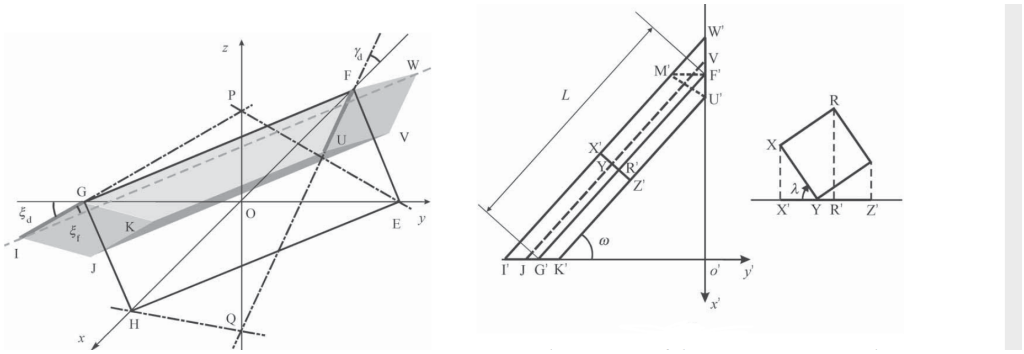

Figure 8: figures of parameters of Mechanism I,labeled a,b,c from left to right [5]

2.2.3. Mechanism III: Planar linkage to keep regular folded shape

This mechanism is used to fix the back feet into the middle at folded position, which would make the folded state of this closer to a normal walking stick. This mechanism contains two stages. At the first stage, the motion of four parts is similar to that in mechanism II, that they form a planar linkage with four parallel joint axes. The difference is, however, in Mechanism III, instead of combining the end of two Mechanism I Bennett linkages, one end is combined with a bar and a chip. This is due to the motion in the second stage. In this stage, two of the joints stops rotation while the other two overlaps with each other to become one joint. This allows the chair to be folded compactly. Generally, in mechanism II, the angle between two edges varies from 0 to 180 degrees, while in mechanism III, the angle varies from 90 degrees to 270 degrees. This means that one of the angles in a quadrilateral would be larger than 180 degrees, which seems impossible. Thus, the motion of the edges after 180 degrees (the second stage) is abnormal. In order to realize this way of motion, the special design shown in Fig 13 is used. In this design, hollow spaces between 2 frame bars are introduced regarding the position of the hinges on the opposite side. This ensures that these 2 sides of hinges can make the rotating axis of the hinges can overlap when brought together, meeting the requirements of Mechanism III.

DOI: 10.54254/2753-8818/2025.23340



Figure 9: Smaller Mechanism I linkage used to connect the front feet (two states)

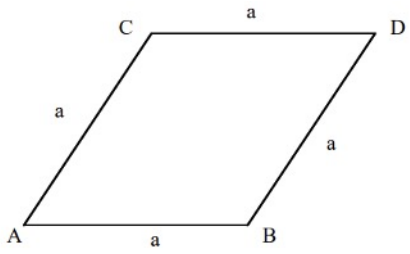

Figure 10: a square linkage [7]

3. Flat Foldable Thick-panel Chair Surface

In order to make the chair more aesthetically pleasing and different from existing designs, we choose thick panel folding arrays as the deployable structure for the chair surface. After multiple iterations, the final design is shown in Fig 14. This design is inspired by this step-free thick panel folding structure [8]. This kind of structure has multiple advantages. First, one element of this structure has only one degrees of freedom because it is a Bennett 6R linkage [8]. This makes it suitable for the chair surface since it will be easily deployed or folded. Second, it can be made into uniform thickness. Although in figure 15 the panels do not have uniform thick, with the following conditions the whole array can be made into a uniform thickness flat panel by equations

$$t_{23}^{A} = t_{34}^{B} \tag{2}$$

$$t_{34}^{A} = t_{23}^{B} \tag{3}$$

$$sin(\alpha_{23}^{A}) = sin(\alpha_{34}^{A}) \tag{4}$$

$$sin(\alpha_{23}^{B}) = sin(\alpha_{34}^{B}) \tag{5}$$

while still meeting the requirements of

$$\alpha_{12}^{A} + \alpha_{34}^{A} = \alpha_{23}^{A} + \alpha_{41}^{A} = \alpha_{12}^{B} + \alpha_{34}^{B} = \alpha_{23}^{B} + \alpha_{41}^{B} = \pi \tag{6}$$

$$\gamma_1 = \pi - \alpha_{34}^{A} - \alpha_{23}^{B} \tag{7}$$

$$\gamma_2 = \pi - \alpha_{23}^{A} - \alpha_{34}^{B} \tag{8}$$

DOI: 10.54254/2753-8818/2025.23340

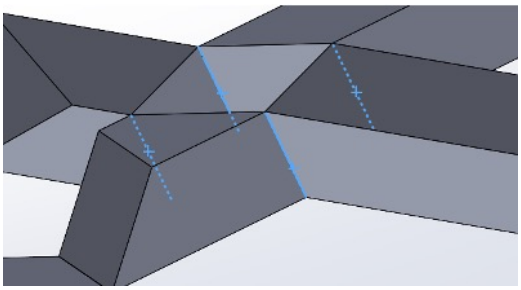

Figure 11: Mechanism 2

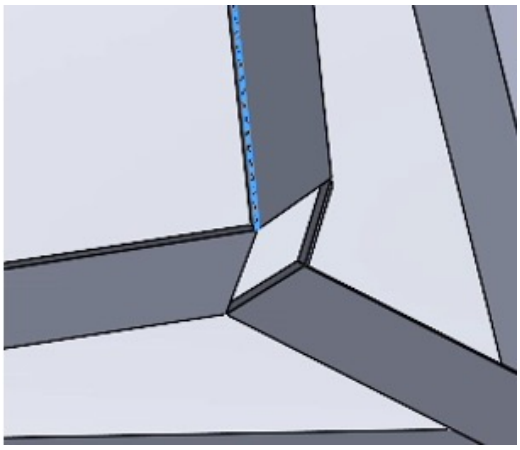

Figure 12: Mechanism III

with all symbols defined in fig 15 and 16 [8]. The third advantage is that this structure is modifiable as long as the 6R linkage is not destroyed. This means that one can cut an original square panel at the sides to make it a trapezoid as long as the 6 panels are still connected together. This allows us to make a panel array that is suitable for the framework discussed before this section.

A thickness of 0.5 cm is chosen for the consideration of stiffness and load-bearing capability of the chair surface. Thus, to fold it into the frame of the chair, 2 elements are combined symmetrically to form the whole surface. Although this gives additional degrees of freedom to the whole structure, it is overall easy to fold because of the symmetry. In addition, careful panel edge designs will help to make the folding process smoother by creating little mountains at the mountain folds and little valleys at the valley folds as show in fig 17.

4. Connection between Surface and Frame

A sliding rotational joint is used to connect the surface and the framework of the chair. When only a rotational joint is applied, the whole structure can not be expanded fully in Solidworks simulation. The distance between the two edge sides and the angle between the two sides can not converge with the two sides on the framework perfectly throughout the folding process. A possible reason is because the 3 DoF of the surface still has certain limitations. Since the framework is left-right symmetric, the dihedral angle of the 2 elements can be set to be the same with each other. However, in order to keep the two edge panels not colliding with the framework, certain limitations are applied to the middle mountain fold. These limitations also cause limitations on the distance and angle between the 2 edges of the surface, leading to the divergence between the surface and the framework. Thus, a sliding

DOI: 10.54254/2753-8818/2025.23340

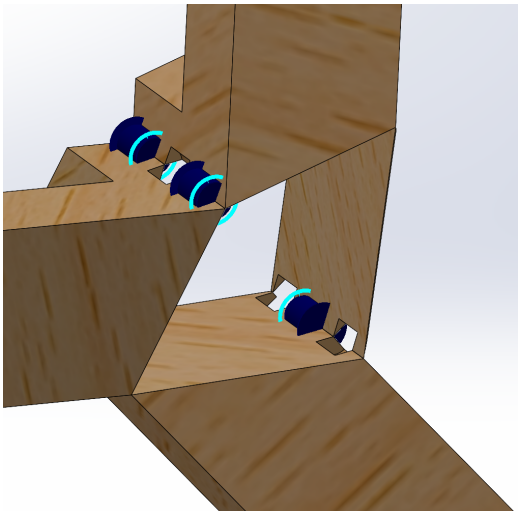

Figure 13: Solving the problem of Mechanism III

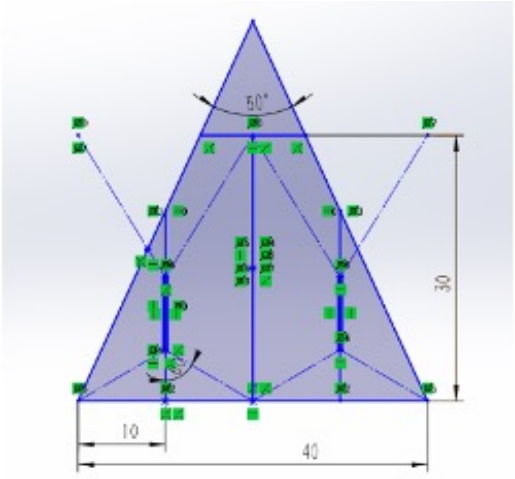

Figure 14: The design of the surface

rotational joint is applied to connect the surface and framework. There are limiters on both tips of the sliding rail to prevent the surface sliding away from the framework.

5. Chair Back Design

For in order to install another surface to the back of the chair as the back stand, an alternative connection is needed for the surface that people sit on. As Fig 18 shows, 2 new sides are chosen to be connected to the framework with a sliding rotational joints. Since these 2 sides don't belong the the out-most panel of the structure when folded, additional thickness of the hollow part of the framework is needed. The back surface will still used the old connection. This will create the design show in Fig 19. When the structure is expanded, the upper 2 frame bars will turn away from the bottom two frame bars, and the special connection helps avoid collision between the two surfaces. Considering the panel might still be too wide when folded, some modification about the surface design is needed. A possible solution is shown in fig 20 which moves the slit and the mountain folds toward the center of the

DOI: 10.54254/2753-8818/2025.23340

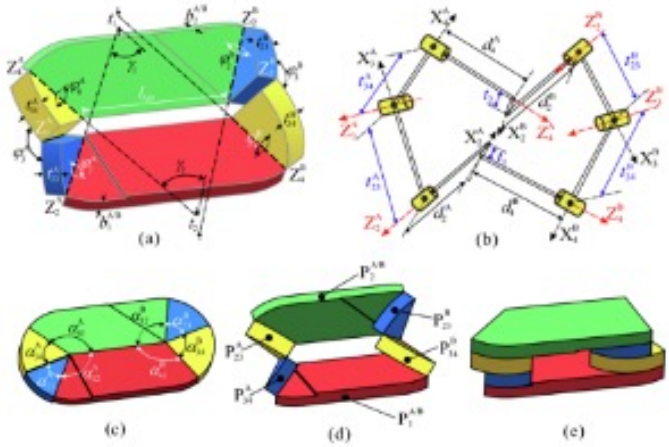

Figure 15: Thick panel kirigami

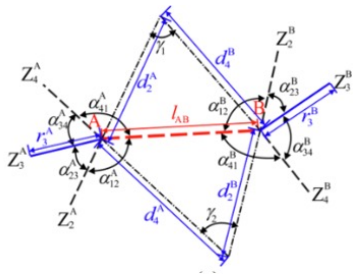

Figure 16: The angles between rotational axis of the structure

surface, reducing the width of the folded panel. This amendment can give more space and possibility to put 2 surfaces onto the framework.

6. Results

6.1. Advantages

Compared with foldable chairs at present, the main advantage of the two designs is that it is wearable, being able to transform into a walking stick. This means that the folded form of the chair is no longer a load, but a tool can be used to help walking. This will reduce the weight of the luggage of either elder people or hikers. The over-constrained structure of the framework allows the DoF of the complete structure to be four. Moreover, at the folded state and unfolded state, the structure is not movable. This means that the chair could be easily folded and unfolded without many procedures. Furthermore, with a thick panel folding instead of using fabric like current designs in the market, the chair can give a better support for the weight of the body and have a better load-bearing capacity.

6.2. Design A vs Design B

Since the mechanism used on the surface is the same for two designs of frame, this part of comparison is based on frame only.

The difference between the two frames could be easily figured out. In the first place, design A is straightforward, which would not bring any hazard with production. Moreover, the long bars enable it

DOI: 10.54254/2753-8818/2025.23340

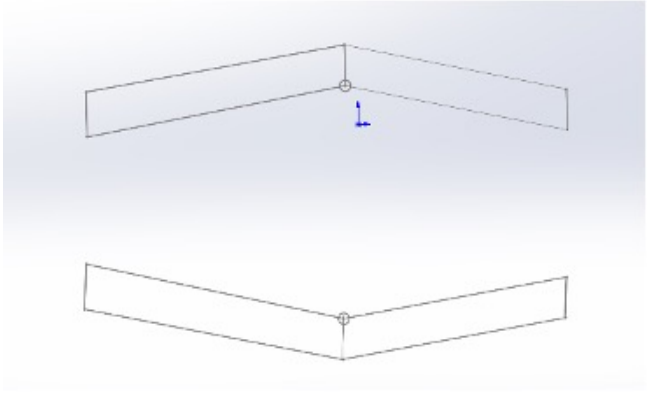

Figure 17: The top is the edge design for mountain folds of the surface. The bottom is for the valley folds.

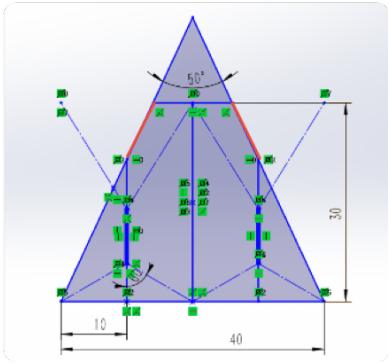

Figure 18: New connection position

to be fixed automatically. That is because the back cannot be completely unfolded with the presence of the longer bars, which would stack the frame, as shown in figure 5. Thus, the frame, being a system of single DoF, would be locked at this position as well. That means no additional fixation is needed. As for design B, one of its main advantages is stability. The direction of four feet gives it large standing area, which prevents it from falling aside. Moreover, thanks to the structure with single DoF, the design B could also be easily fixed at a particular state.

6.3. Surface panel design comparison

At very first, the compact thick panel folding array is considered to be used as the chair surface because it also has 1 DoF, while it can be folded very compactly [9]. It is thought that it can be folded into smaller volumes and should be the best configuration. However, during the process, it is found

Table 1: Comparison between Design A & B

	Design A	**Design B**
Advantage	simple design self-supportive mechanism	stability shape
Disadvantage	Risk of falling	Hazard regarding Mechanism III

DOI: 10.54254/2753-8818/2025.23340

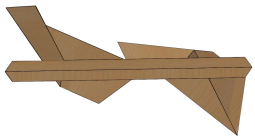

Figure 19: Design including both sitting and back surface

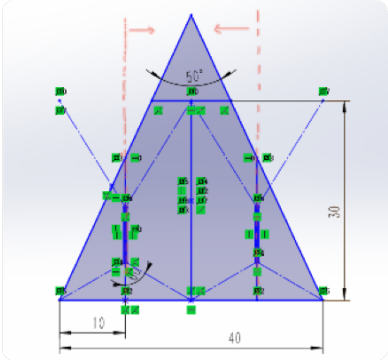

Figure 20: Possible optimization of surface design

that the frame and the surface of the chair does not have similar expansion track. There are a bottom panel and a top panel when the array is totally folded. By studying the motion of different tessellations using the matrices, the following tracks in figure 5 illustrate how 2 points on these two panels move with respect to each other. It is obvious that the tracks do not follow an arc with a small angle, like the expansion of the frame. Instead, they are like a hemi-ellipse with a rather big eccentricity. This makes fixing one side of each top and bottom panel to the frame impossible. The only applicable fixation will be fixing a point, but that will make the whole panel unstable.

6.4. Force Simulation

6.4.1. Design A

Simulation about force and pressure on the framework is done in Solidworks with material chosen as wood, generating figures 22 and 23.The simulated force is 700N for each bar. Most severe stress is located at back foot bars and the middle of the 2 horizontal bars that is connected with the chair surface, reaching a value around $2 *^{7} Pa$.

DOI: 10.54254/2753-8818/2025.23340

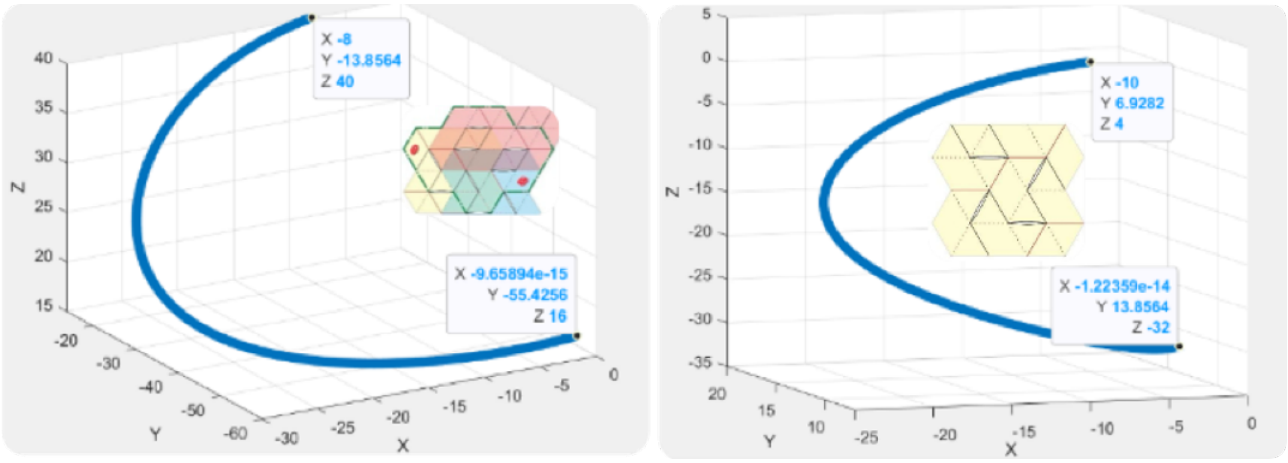

Figure 21: Track and shape of the old design for the surface of the chair

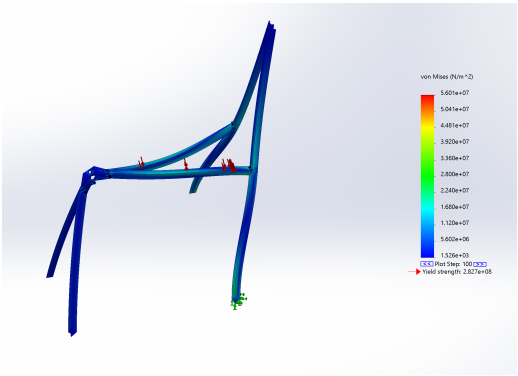

Figure 22: Force simulation of design A with deformation on(balsa wood,700N)

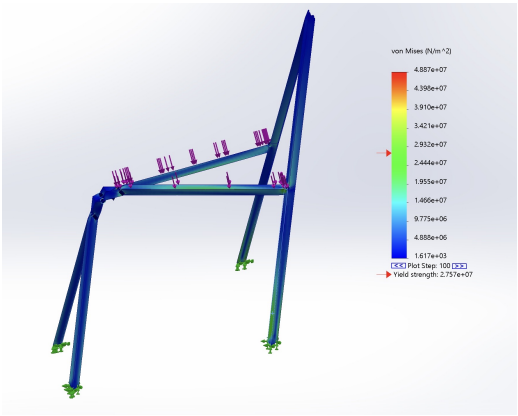

Figure 24: Force Simulation of design A with deformation on (1060 Al alloy,700N)

DOI: 10.54254/2753-8818/2025.23340

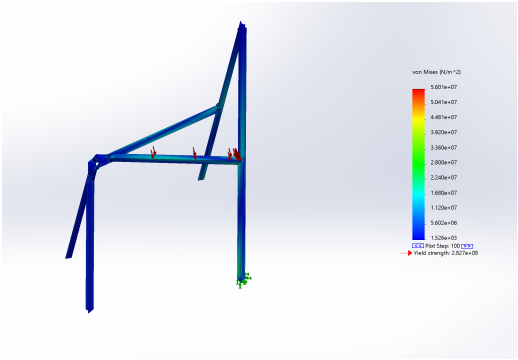

Figure 23: Force simulation of design A with deformation off(balsa wood,700N)

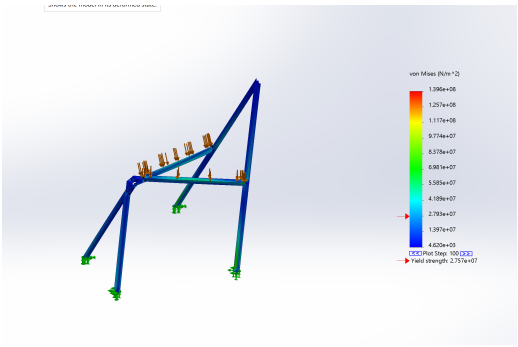

Figure 25: Force Simulation of design A with deformation on (1060 Al alloy,1000N)

Later, new material, 1060 aluminum, is applied to the framework, deformation disappeared, as shown in fig 24. Even when the force applied to each bar is increased to 1000N, the deformation exists, but remains very small, shown in fig 25. Thus, the load-bearing capability of the framework made of 1060 aluminum alloy is sufficient for normal people use. On the other hand, if wood is chosen

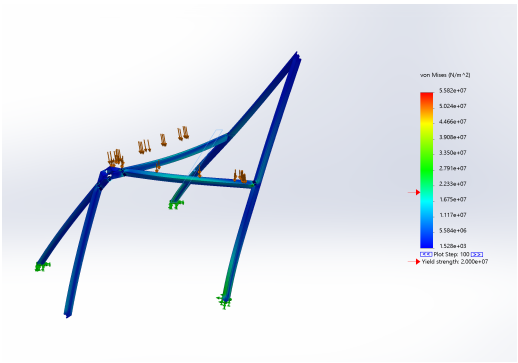

Figure 26: Force Simulation of design A with deformation on(wood,350N)

as material, even with 350N on each side there is still notable deformation, which is shown in fig 26.

DOI: 10.54254/2753-8818/2025.23340

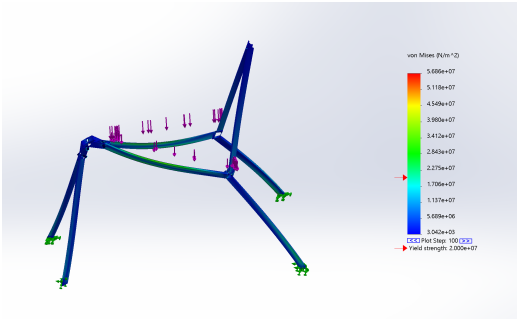

Figure 27: Force Simulation of design B with deformation on (balsa wood,700N)

6.4.2. Design B

For design B, similar simulations are performed. As shown in fig 27, with 700N on each side and material as wood, the framework shows decent deformation, proving that wood may not be strong enough for either design. In addition, the stress at mechanism II is rather large, shown in fig 28. Thus, using the aluminum alloy is necessary. Using 1060 aluminum alloy as material, non visible deformation is observed after appling 700N to each side,as shown in fig 29. Also, the stress distribution is similar to design A, and stress around mechanism III is same as fig 28. Thus, the light weighted aluminum alloy is suitable for the framework no matter design A or B.

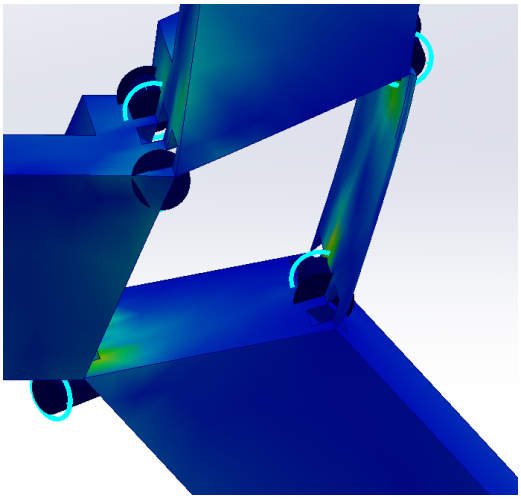

Figure 28: Force Simulation of mechanism III with deformation on (Balsa wood,700N)

7. Discussion

Although the design is optimized as far as possible, there are still some drawbacks need to be fixed. First, the material for the framework must be both light and strong to sustain the weight put on it in either folded, walking-stick form or expanded, chair form. Whether 1060 aluminum alloy is the best choice still needs to be tested considering both load-bearing ability and cost of material.

The drawbacks of the structure are also clear. The shape of design A at folded state is not that close to a walking stick, with the back feet of the chair on a side instead of in the middle. In design

DOI: 10.54254/2753-8818/2025.23340

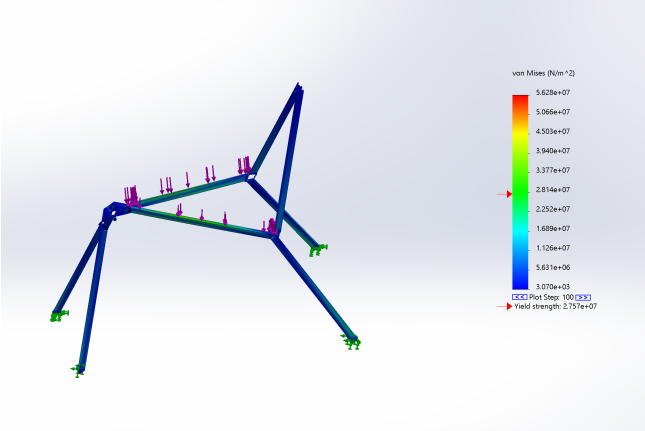

Figure 29: Force Simulation of design B with deformation on (1060 Al alloy,700N)

B, Mechanism III that is introduced to solve the problem. However, while a unique design introduced previously is used to solve the hazard of abnormal motion while folding, this unique design might bring difficulty in supporting of the structure as there would be a large stress concentrated on it.

Further works about the chair surface should be done to reduce the part that stuck out of the framework when folded. The patterns of the mountain and valley folds need to be redesigned. Also, more strict weight-bearing analysis need to be performed to systemically study the limit of the loading capability of the chair.

8. Conclusion

In this paper, an innovative design of compactly foldable chair is introduced. The special design allows a chair with back to be folded into the shape of a stick, which thus becomes wearable for the elders.

Moreover, the structure of foldable chair is optimized by reducing the DoF. With unique structure used on the frame and surface of the chair, five degrees of freedom is found in the final design. This, however, would not make the structure mobile with people sitting on it. That is because given the surface is flat, the degree of freedom would be reduced to one, which means by fixing one rotational joint, the structure would be rigid. In design A, this fixation is already done by its self-supportive structure, while in design B, it could also be done easily. Overall, the folding and unfolding of the chair do not require any additional steps, but opening the frame of chair and sitting on the surface.

Acknowledgement

Zhanyue Gao and Shuoning Chen contributed equally to this work and should be considered co-first authors.

Kunning Liu and Yanlin Zhu contributed less to this work and should be considered co-second authors.

References

[1] Ministry of Civil Affairs, “2022 National Report on the Development of Aging Services,” Chinese government website, 2022. [Online].
Available: https://www.gov.cn/lianbo/bumen/202312/P020231214405906944856.pdf. [Accessed: 29-Jul-2024]

DOI: 10.54254/2753-8818/2025.23340

[2] Tian-Jian, C. (2013). Office chair design and creation based on sitting behavior. Packaging Engineering.
https://en.cnki.com.cn/Article_en/CJFDTOTAL-BZGC201308014.htm
[3] I. S. Jacobs and C. P. Bean, "Fine particles, thin films and exchange anisotropy," in Magnetism, vol. III, G. T. Rado and H. Suhl, Eds. New York: Academic, 1963, pp. 271–350.
[4] VIGAR Zeroline Foldable Stool 23cm - Grey — NTUC FairPrice. (n.d.). FairPrice. https://www.fairprice.com.sg/product/vigar-zeroline-grey-foldable-stool-23cm-1-pc-90170734.
[5] Chen, Y., & You, Z. (2007). "Square deployable frames for space applications. Part 2: Realization." Proceedings of the Institution of Mechanical Engineers Part G Journal of Aerospace Engineering, 221(1), 37–45. https://doi.org/10.1243/09544100jaero100.
[6] Song, X., Deng, Z., Guo, H., Liu, R., Li, L., & Liu, R. (2017). "Networking of Bennett linkages and its application on deployable parabolic cylindrical antenna." Mechanism and Machine Theory, 109, 95–125. https://doi.org/10.1016/j.mechmachtheory.2016.10.019.
[7] King, Henry C. (1999) "Planar Linkages and Algebraic Sets," Turkish Journal of Mathematics: Vol. 23: No. 1, Article 3. https://journals.tubitak.gov.tr/math/vol23/iss1/3
[8] Wang, C., Zhang, D., Li, J., & You, Z. (2022). "Kirigami-inspired thick-panel deployable structures." International Journal of Solids and Structures, 251, 111752. https://doi.org/10.1016/j.ijsolstr.2022.111752
[9] J. Yang, X. Zhang, Y. Chen, & Z. You, "Folding arrays of uniform-thickness panels to compact bundles with a single degree of freedom", Proc. R. Soc. Math. Phys. Eng. Sci., vol. 478, no. 2261, p. 20220043, May 2022, doi: 10.1098/rspa.2022.0043.