Proceedings of the 3rd International Conference on Modern Medicine and Global Health
DOI: 10.54254/2753-8818/2025.24224

Comparison of Gaussian and Wavelet Based Denoising Methods on fMRI Data

Zhexuan Zhou

Department of Bioengineering, Dalian University of Technology, Dalian, China
zhouzhexuan666@mail.dlut.edu.cn

Abstract: This study investigates the effectiveness of Gaussian and wavelet-based denoising methods in preprocessing functional Magnetic Resonance Imaging (fMRI) data. Through a comparative analysis, we evaluate these techniques based on their ability to retain critical image information, influence the spatial extent of activation maps, and affect the accuracy of time series fitting. The 3D wavelet transform is shown to excel in preserving fine image details, albeit at the cost of producing smaller activation maps and poorer time series fitting. In contrast, Gaussian smoothing, while resulting in a loss of image information, generates larger activation maps with superior time series fitting. These findings highlight the trade-offs between the two methods, providing valuable insights for researchers in selecting the most appropriate denoising technique based on the specific objectives of their fMRI studies.

Keywords: fMRI, Denoising, Gaussian Smoothing, z3D Wavelet Transform

1. Introduction

Functional magnetic resonance imaging (fMRI) is a powerful, non-invasive technique that utilizes changes in blood oxygen levels to assess functional activity in the brain [1]. With advancements in fMRI analysis methods, interest in elucidating functional connectivity within the brain has rapidly grown. However, researchers in the field of functional neuroimaging face a significant challenge during the pre-processing of fMRI data–noise. Consequently, researchers typically perform a denoising step prior to analysing fMRI data.

The most commonly used denoising method is Gaussian smoothing (GS) [2], which suppresses high-frequency noise and significantly improves the signal-to-noise ratio. However, GS can result in substantial alterations to the actual intensity values, causing the signal values to be averaged along with the noise [3]. In addition, GS suppresses the edge details and mid-frequency information of the original images [4].

Another commonly used method is wavelet transform [5]. Wavelet transformed based denoising allows for the preservation of relevant detail information while discarding small details introduced by noise [5]. The general process of wavelet transform involves (i) computing the discrete wavelet transform (DWT), (ii) applying appropriate methods to remove or diminish noisy wavelet coefficients, and (iii) reconstructing the image using the inverse wavelet transform of the denoised wavelet coefficients [3]. The WaveLab project provides an open-source collection of 2D wavelet routines suitable for processing two-dimensional images [6]. Based on 2D wavelet transform (2D-DWT), Wang et al. proposed a 3D wavelet-based bilateral filter for removing Rician noise from 3D MR volumes. Wang noted that the 3D wavelet transform (3D-DWT) offers a better representation of

© 2025 The Authors. This is an open access article distributed under the terms of the Creative Commons Attribution License 4.0 (https://creativecommons.org/licenses/by/4.0/).

DOI: 10.54254/2753-8818/2025.24224

continuous planes compared to the 2D discrete wavelet transform (DWT) [7]. Khullar et al. introduced a multi-directional denoising method based on 3D-DWT. Independent Component Analysis (ICA) is utilized for source separation in the wavelet domain [3]. Güzin et al. proposed a weighted three-dimensional discrete wavelet transform (w-3D-DWT), which employs a subband weighting algorithm focused on improving the representation of subbands that more accurately depict the image, while minimizing the impact of subbands that inadequately represent the image, thereby adaptively decreasing noise in the image [4]. Most wavelet-based methods exhibit lower smoothing characteristics that preserve more detail but may result in noise residue [8].

To investigate denoising techniques that effectively preserve anatomical details while reducing Gaussian noise, this study evaluates the denoising performance of several widely used methods, including Gaussian smoothing and wavelet transform-based methods, including a newly proposed weighted threshold 3D wavelet transform method(w-t-3D-DWT). The effectiveness of each approach was assessed and compared using quantitative metrics such as Mean Square Error (MSE), Peak Signal-to-Noise Ratio (PSNR), Structural Similarity Index (SSIM), and functional analysis, including brain activation, functional connectivity, and time series analysis, with a focus on the denoising efficacy of wavelet-based methods for fMRI images.

2. Methods

2.1. fMRI data

All denoising methods were performed on the open-source datasets – The single subject epoch (block) auditory fMRI activation data – from the SPM website [9]. The data consists of 96 images organized into 16 blocks, with 6 images per block. The acquisition was made on a modified 2 Tesla Siemens MAGNETOM Vision system. Each acquisition consisted of 64 contiguous slices (64 × 64 × 64 with 3mm × 3mm × 3mm voxels). Auditory stimulation was with bi-syllabic words presented binaurally at a rate of 60 per minute.

Before the denoising step, the fMRI images were realigned, co-registered, and normalized using SPM12. Then, different methods, including Gaussian smoothing, 2D-DWT-based denoising, 3D-DWT-based denoising, w-3D-DWT, and w-t-3D-DWT method, were evaluated on the same pre-processed dataset. Fig.1 illustrates the basic workflow of the experiment.

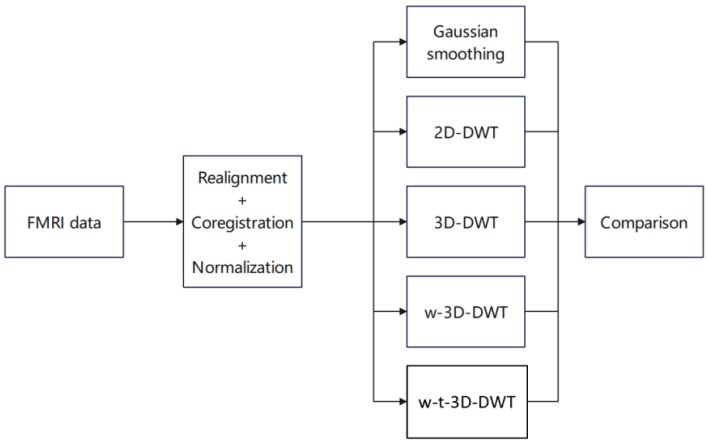

Figure 1: Workflow of proposed experiment

DOI: 10.54254/2753-8818/2025.24224

2.2. Denoising methods

2.2.1. Gaussian smoothing

Noise in MRI images follows a Rician distribution, which can be approximated by a Gaussian distribution under certain conditions [10]. Consequently, Gaussian smoothing is effective in reducing Gaussian noise in fMRI data. This method involves convolving the image with a Gaussian kernel of a specified size. After Gaussian smoothing, the pixel value at a given point in the image is the weighted average of the pixel values under the Gaussian kernel centred at the corresponding point in the original image. Gaussian smoothing has been proven effective in denoising fMRI images. Additionally, Gaussian smoothing has little impact on the time series contrast, which is of more significance in fMRI studies than structural information. Nevertheless, Gaussian filtering, inherently a low-pass filtering technique, removes high-frequency noise but also leads to some loss of image detail, resulting in a blurring effect. This may lead to some loss of anatomical details on the edges of the image. In order to preserve these details, other methods were proposed, including Wavelet transforms.

2.2.2. Wavelet transforms

One-dimensional wavelet transform of a signal yields its distribution in the time-frequency domain, allowing the analysis of how the frequency components of the time series signal vary over time [10].

For 2D images, a two-dimensional wavelet transform can separate the image into its approximation and detail components. This is typically achieved by combining high-pass and low-pass filters, as shown in Fig.4. After a first-level wavelet transform, the resulting wavelet coefficients are of the same size to the input image and are divided into four subbands, which are named here as LL1, LH1, HL1, and HH1, as is shown in Fig. 2. Here, LL1 represents the approximation component of the image, which retains a significant amount of image-related information, while the other three subbands correspond to the edge details in different directions.

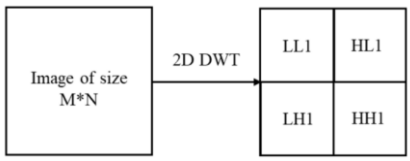

Figure 2: Decomposition using 2D-DWT [5]

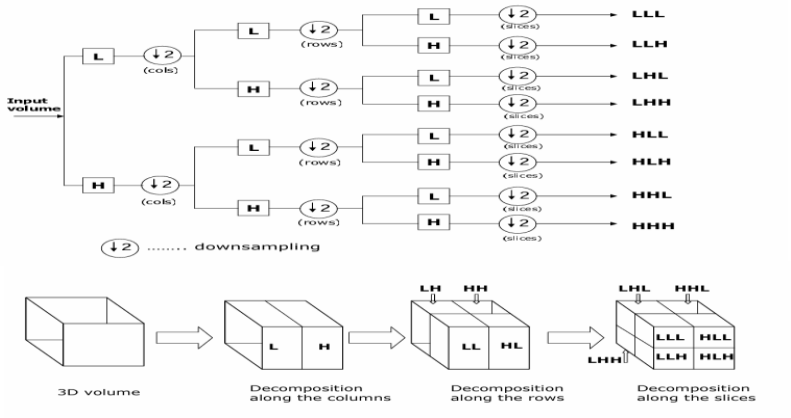

Figure 3: 1 level 3D-DWT yielding 8 components [4]

DOI: 10.54254/2753-8818/2025.24224

Similarly, a three-dimensional wavelet transform of a 3D image separates its low-frequency approximation from high-frequency details. A first-level three-dimensional wavelet transform results in eight components: one low-frequency approximation (LLL1) and seven high-frequency detail components (Fig.3). This is achieved by applying high-pass and low-pass filters along the x, y, and z axes. Extending this concept, an n-level three-dimensional wavelet transform will produce $7n$+1 subbands, comprising one low-frequency component and $7n$ high-frequency components (Fig.4).

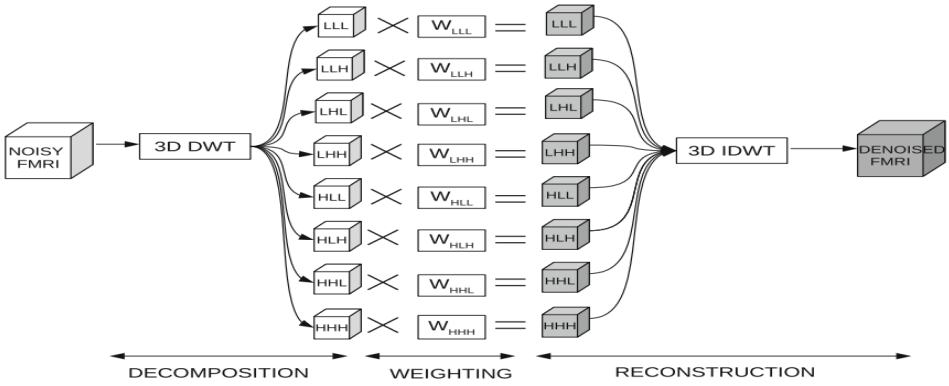

Figure 4: Denoising based on w-3D-DWT [4]

2.2.3. Implementation of wavelet transform-based denoising methods in MATLAB

All wavelet transform-based denoising algorithms were implemented using MATLAB (2020a and 2023a). For the 2D-DWT method, the db1 wavelet function was employed, and the filtering method used was thresholding. The threshold values were computed using MATLAB's built-in functions. A hard thresholding method was chosen to depress the noise components better.

For the 3D-DWT, the same db1 wavelet function was utilized, and thresholding was applied using a uniform threshold across all wavelet coefficients. Details of the algorithms are illustrated in Fig. 3. After a two-level discrete wavelet transform, the corresponding 15 components went through hard thresholding, the threshold of which was manually set. Then, the filtered components were inverse wavelet transformed to obtain the denoised image.

In the case of the w-3D-DWT-based method, energy was computed for each component individually, as well as the energy of the whole image [4]. The weights for each component were determined by dividing their respective energies by the total energy of the image. The formulas for calculating energy and weights are provided by Eq. (1). Here (m, n, p) is the position of the signal in the original image, while (x, y, z) denotes the size of the image. Ei refers to the total energy of the image.[4]

$$Ei = \sum_m^x \sum_n^y \sum_p^z |E(m,n,p)|^2 \tag{1}$$

Es refers to the energy of the subbands, where (i, j, k) indicates the position of the subbands.

$$Es(i,j,k) = \sum_m^x \sum_n^y \sum_p^z |E(i,j,k)|^2 \tag{2}$$

Then, the corresponding weights of different subbands are obtained by dividing the energy of the subbands by that of the original image.

$$W(i,j,k) = \frac{Es(i,j,k)}{Ei} \tag{3}$$

DOI: 10.54254/2753-8818/2025.24224

The wavelet coefficients were then adjusted by multiplying each component by its corresponding adaptive weight. Finally, the inverse three-dimensional wavelet transform was performed to obtain the denoised image using the w-3D-DWT method, shown in Fig.4.

For the w-t-3D-DWT, adaptive thresholding was introduced to suppress the noise components according to their local distribution in the wavelet transform subbands. Similar to the 3D-DWT method, hard thresholding was adopted to better supress the noise by setting the wavelet coefficients under the threshold to zero. Inspired by the w-3D-DWT-based methods, noise levels are assumed to be different among the 15 wavelet subbands. Thus, introducing an adaptive threshold according to the energy of different wavelet subbands may reduce information loss while suppressing the noise. The weighted threshold for each component is obtained by Eq. (4).

$$Ta = W(i,j,k) \cdot T \tag{4}$$

Here, the coordinate (i, j, k) refers to the position of the subbands. The weight W(i, j, k) is given by Eq. (3) and T is a manually determined threshold. Details of this method were illustrated by Fig. 5

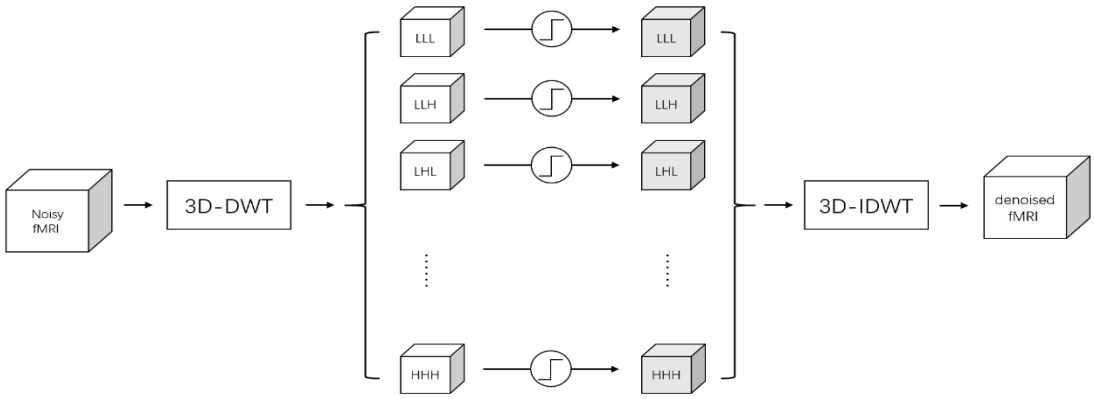

Figure 5: Denoising based on w-t-3D-DWT

2.3. Performance evaluation of denoising methods

2.3.1. Evaluation metrics for performance

In this study, MSE, PSNR and SSIM metrics commonly used in denoising tasks were used to evaluate the denoising methods.

Widely used in image processing and signal analysis, MSE is calculated by averaging the squared variance between the reference image and the corresponding pixel values of the processed image. It can be used to compare the difference between the original signal and the denoised signal. A lower MSE value means closer to the original image, which means higher fidelity. The following formula 5 was used for MSE calculation:

$$MSE = \frac{1}{MNP}\sum_{i=1}^{M}\sum_{j=1}^{N}\sum_{k=1}^{P}\left(x(i,j,k) - y(i,j,k)\right)^2 \tag{5}$$

MSE is simple and easy to calculate, but it is not possible to evaluate other aspects of the image before and after denoising. Therefore, it is often used in combination with other metrics, such as PSNR and SSIM.

PSNR is a ratio of the maximum possible power of a signal to the destructive noise power that affects its representation accuracy. By comparing the original image with the noisy image, the PSNR value is obtained. The calculation formula of PSNR is as follows:

DOI: 10.54254/2753-8818/2025.24224

$$PSNR = 10log_{10}\left(\frac{R^2}{MSE}\right) \quad (6)$$

R denotes the maximum possible value of the image data type.

SSIM is used to assess the similarity between two images. Different from MSE, which mainly focuses on pixel-level intensity differences, SSIM is mainly compared to brightness, contrast, and other dimensions. The calculation formula of SSIM is as follows:

$$SSIM(X,Y) = \left(\frac{1}{N}\sum_{R=1}^{N} SSIM(x,y)_R\right) \quad (7)$$

For these calculations, grayscale images were utilized to offer a clearer representation of noise and detail loss, thereby improving the reliability of the evaluation results.

2.3.2. Functional evaluation

In task-based functional MRI (fMRI) analysis, activation graph, time series analysis and functional connectivity analysis are commonly used, and we will also use these three methods to evaluate the denoising effect.

Activation maps were obtained by comparing brain regions with significant changes in blood oxygen level-dependent (BOLD) signals in different states. Areas with significant changes in neural activity will be shown in the activation map, helping researchers identify the functional areas relevant to the task.

Time series analysis involves examining the temporal dynamics of the BOLD signal on a predefined region of interest (roi) throughout the task. By studying the time series, the process of neural activity over time can be obtained, helping researchers to identify brain activation regions that are synchronized with the corresponding task events.

Functional connectivity analysis studies temporal correlations between signals from different brain regions, revealing how different regions interact and coordinate, helping researchers understand the brain's network structure.

3. Results

We qualitatively compared the advantages and disadvantages of four algorithms: Gaussian Smoothing, DWT, 3D-DWT, and w-3D-DWT.

The MSE, PSNR, and SSIM values for the synthetic data obtained using the aforementioned denoising techniques are listed in Table 1. Lower MSE values, higher PSNR values, and higher SSIM values indicate superior image quality. The results demonstrate that the image quality from the 3D-WT is the best.

Table 1: Evaluation parameters of different algorithms

Algorithm	**Test image and noise level**		
	MSE	PSNR	SSIM
Gaussian Smoothing	515.99	22.12	0.6869
2D-Wavelet Transform	160.80	27.19	0.6035
3D-Wavelet Transform	73.44	29.92	0.6817
Weighted 3D wavelet Transform	320.42	23.79	0.7953
Weighted Threshold 3D wavelet Transform	371.68	23.01	0.9959

DOI: 10.54254/2753-8818/2025.24224

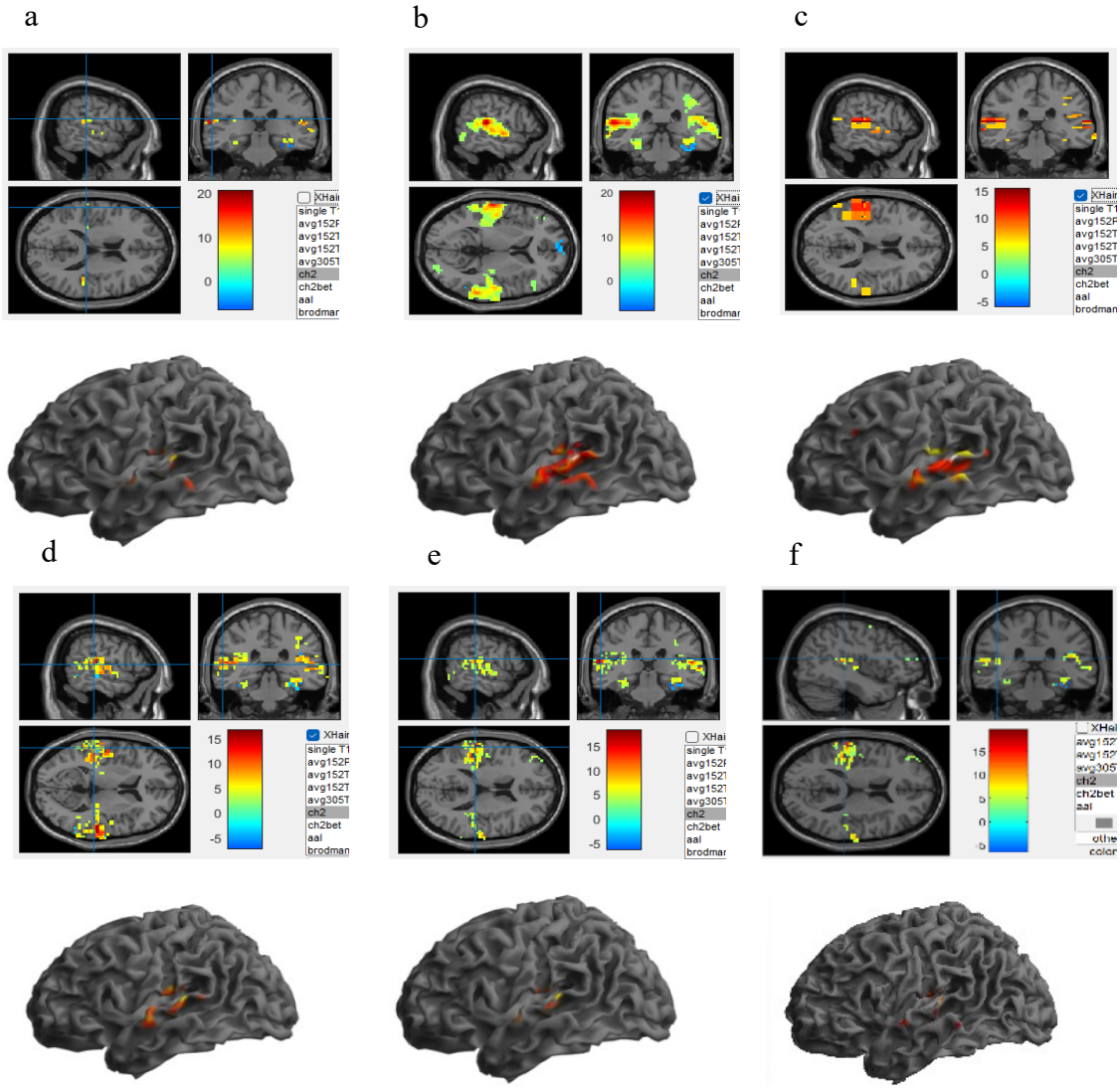

Figure 6: Comparison of brain region activation results. (a)The original fMRI image (b)Image after GS processing (c)Image after 2D-DWT processing (d)Image after 3D-DWT processing (e)Image after w-3D-DWT processing (f)Image after w-t-3D-DWT processing

The brain activation imaging results are illustrated in Fig.6. The original image is shown in Fig.6a. The results after GS exhibit a loss of some structural details, leading to a noticeable expansion of the activated regions (Fig.6b). The results obtained from 2D-DWT reveal block-like activation regions, failing to preserve the activation details, while also resulting in a significant enlargement of the activated areas (Fig.6c). In the outcomes of 3D-DWT (Fig.6d), w-3D-DWT (Fig.6e), and w-t-3D-DWT (Fig.6f), the activated regions do not show significant enlargement, the details are well-preserved, and there is a marked improvement in edge effects.

DOI: 10.54254/2753-8818/2025.24224

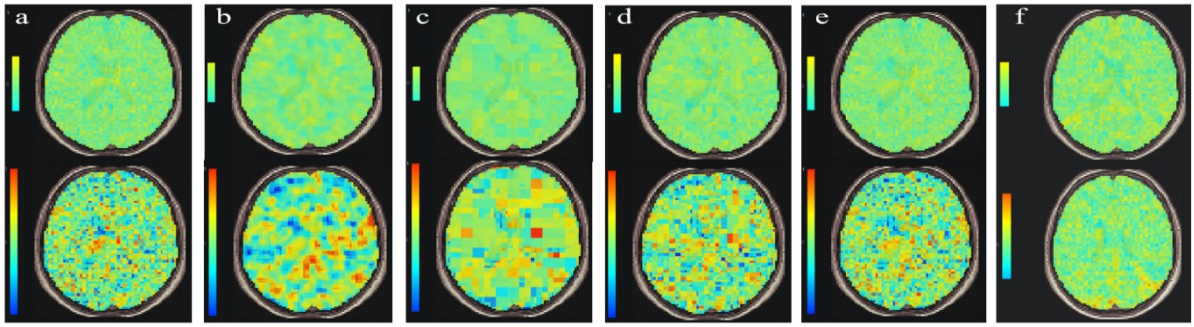

Figure 7: Comparison of gPPI and SBC results. (a)The original fMRI image (b)Image after GS processing (c)Image after 2D-DWT processing (d)Image after 3D-DWT processing (e)Image after w-3D-DWT processing (f)Image after w-t-3D-DWT processing

Functional connection analysis results of functional magnetic resonance imaging with different denoising methods are presented in Fig.7. The original image is shown in Fig.7a. The results after GS exhibit a loss of some details, retaining only the primary functional connectivity regions (Fig.7b). In the outcomes of the 2D-DWT, the connectivity areas appear block-like, making it difficult to discern the activated brain regions, and substantial detail information is lost (Fig.7c). The results of the 3D-DWT demonstrate better preservation of small structures, retaining more informational content (Fig.7d). However, in the results from the w-3D-DWT, noticeable noise remains present (Fig.7e). The image processed with w-t-3D-DWT maintains normal activation in detail regions and preserves some level of intricacy; however, the contrast is significantly reduced (Fig.7f).

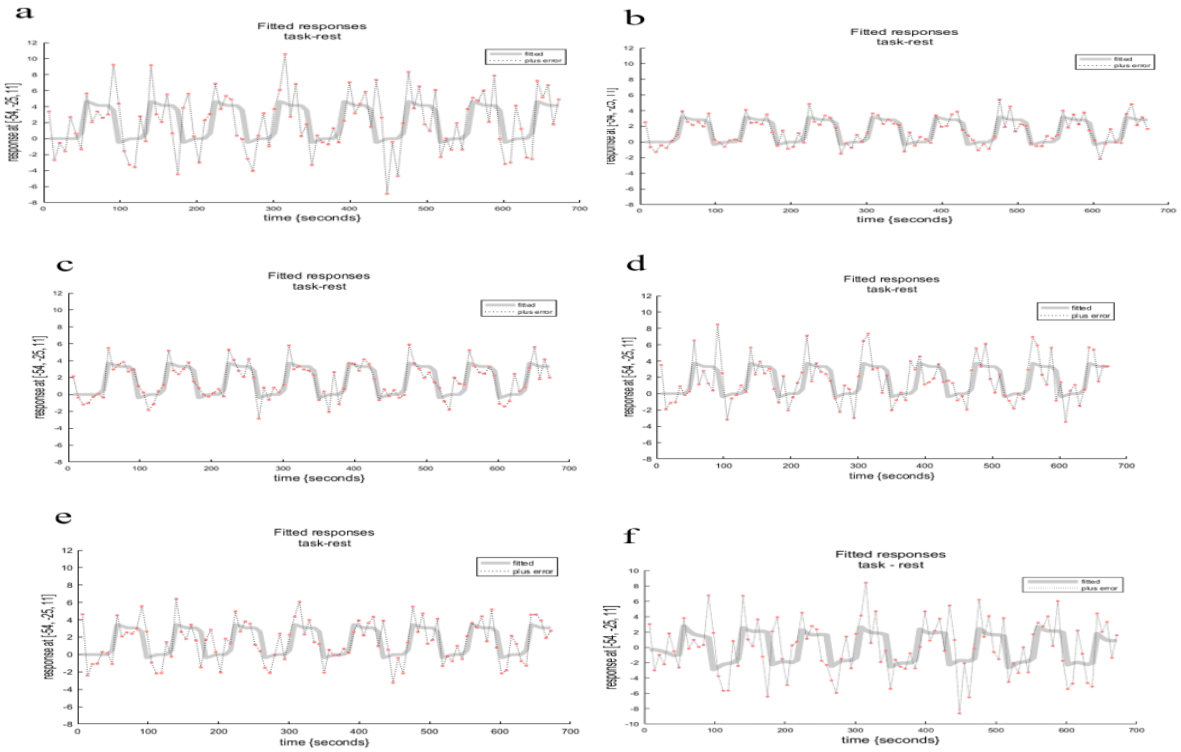

Figure 8: Comparison of time series analysis results. (a)The original fMRI image (b)Image after GS processing (c)Image after 2D-DWT processing (d)Image after 3D-DWT processing (e)Image after w-3D-DWT processing (f)Image after w-t-3D-DWT processing

DOI: 10.54254/2753-8818/2025.24224

The time series imaging results are illustrated in Fig.8. The original image is displayed in Fig.8a. The results following GS demonstrate the highest fitting degree and signal-to-noise ratio (Fig.8b). The outcomes from the 2D-DWT show a relatively high fitting degree, but still retain some lower peaks (Fig.8c). The results from the 3D-DWT (Fig.8d) and the w-3D-DWT (Fig.8e) exhibit a lower fitting degree, with noticeable peaks and a reduced signal-to-noise ratio. The time series images processed with w-t-3D-DWT show negligible changes (Fig.8f).

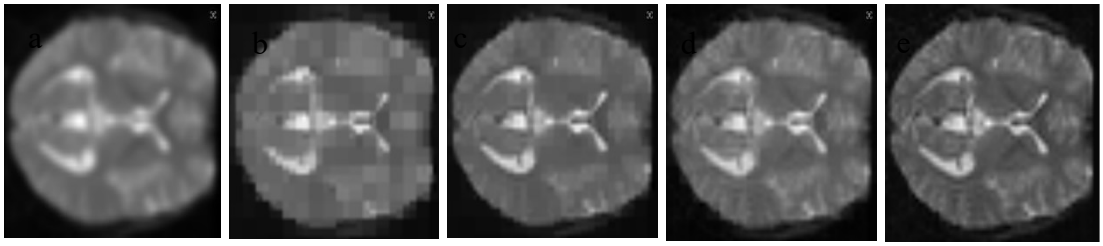

Figure 9: Comparison of denoising analysis results. (a)Image after GS processing (b)Image after 2D-DWT processing (c)Image after 3D-DWT processing (d)Image after w-3D-DWT processing (e)Image after w-t-3D-DWT processing

The grey-scale map results are depicted in Fig.9. The outcomes after GS exhibit a loss of certain structural details, resulting in blurred edges (Fig.9a). The results from the 2D-DWT show a pixelated appearance, with severe loss of detail (Fig.9b). In the results of the 3D-DWT (Fig.9c), the w-3D-DWT (Fig.9d), distinct edge features are retained, with thew-3D-DWT preserving more white matter information. The image processed through w-t-3D-DWT retains the maximum amount of detail, exhibits distinct edge features, and presents a clear demarcation between gray matter and white matter, characterized by high contrastl (Fig.9e).

4. Discussion

Through the comparative analysis of Gaussian smoothing and wavelet denoising methods in fMRI data preprocessing, we can draw the following conclusions:

Compared with Gaussian smoothing, wavelet transform can preserve image details better. The method of wavelet transform is helpful to study the subtle changes of neural activity in the brain.

The Gaussian smoothing method, on the other hand, tends to obtain a larger area of activation and, therefore, has an advantage in identifying a wider range of brain activity.

In time series analysis, Gaussian smoothing can better fit the data and be more accurate and reliable in the temporal correspondence between the neural response and the task. Gaussian smoothing not only shows the denoising effect in space domain, but also shows the denoising effect in time domain. Therefore, when the time series of brain activity needs to be analyzed accurately, Gaussian smoothing should be used.

Researchers should choose denoising methods according to the specific research content, weighing various factors. The wavelet transform method should be used to study the detail and structural integrity of neural signals. For studies that require a larger range of activation patterns and more precise time series, Gaussian smoothing methods should be used.

Both of these methods have certain limitations. In the future, we can combine their advantages to develop a hybrid denoising technology, which can not only save image details but also improve the accuracy of time series fitting and further improve the denoising performance. Or further base on wavelet transforms denoising method for time domain denoising, which will also improve the effect of denoising.

DOI: 10.54254/2753-8818/2025.24224

5. Conclusion

In this study, a comprehensive evaluation of fMRI data preprocessing methods based on Gaussian and wavelet denoising was carried out. The analysis shows that the wavelet transform has a good ability to preserve image details. However, this advantage is offset by a reduction in the spatial scope of the activation graph and inaccurate fitting of the time series data. Conversely, Gaussian smoothing, while causing some loss of image detail due to its blurring effect, produces a larger activation graph and provides better time series data fitting. This shows that Gaussian smoothing is more suitable for the study of a large range of activation regions and precise time series, and wavelet transform is more suitable for the study of fine image information and neural signals. Future research could explore hybrid denoising methods that leverage the strengths of both methods to achieve more balanced results.

References

[1] *I. V. Onut,A. A. Ghorbani. (2004, 25-29 July 2004). Classifying cognitive states from fMRI data using neural networks. 2004 IEEE International Joint Conference on Neural Networks (IEEE Cat. No.04CH37541),*

[2] *J. B. Poline, K. J. Worsley, A. C. Evans,K. J. Friston. (1997). Combining Spatial Extent and Peak Intensity to Test for Activations in Functional Imaging. NeuroImage, 5(2), 83-96. https://doi.org/https://doi.org/10.1006/nimg.1996.0248*

[3] *S. Khullar, A. Michael, N. Correa, T. Adali, S. A. Baum,V. D. Calhoun. (2011). Wavelet-based fMRI analysis: 3-D denoising, signal separation, and validation metrics. NeuroImage, 54(4), 2867-2884. https://doi.org/https://doi.org/10.1016/j.neuroimage.2010.10.063*

[4] *G. Özmen,S. Özşen. (2017). A new denoising method for fMRI based on weighted three-dimensional wavelet transform. Neural Computing and Applications, 29(8), 263-276. https://doi.org/10.1007/s00521-017-2995-7*

[5] *A. M. Wink,J. B. J. M. Roerdink. (2004). Denoising Functional MR Images: A Comparison of Wavelet Denoising and Gaussian Smoothing. IEEE Transactions on Medical Imaging, 23(3), 374-387. https://doi.org/10.1109/tmi.2004.824234*

[6] *J. B. Buckheit,D. L. Donoho. (1995). WaveLab and Reproducible Research. In A. Antoniadis and G. Oppenheim (Eds.), Wavelets and Statistics (pp. 55-81). Springer New York. https://doi.org/10.1007/978-1-4612-2544-7_5*

[7] *Y. Wang, X. Che,S. Ma. (2012). Nonlinear filtering based on 3D wavelet transform for MRI denoising. EURASIP Journal on Advances in Signal Processing, 2012(1), 40. https://doi.org/10.1186/1687-6180-2012-40*

[8] *D. L. Donoho,I. M. Johnstone. (1994). Ideal spatial adaptation by wavelet shrinkage. Biometrika, 81(3), 425-455. https://doi.org/10.1093/biomet/81.3.425*

[9] *K. Friston. (2020, 13th January 2020). Statistical Parametric Mapping. Retrieved 1st October 2024 from https://www.fil.ion.ucl.ac.uk/spm/*

[10] *M. Mikl, R. Mareček, P. Hluštík, M. Pavlicová, A. Drastich, P. Chlebus, M. Brázdil,P. Krupa. (2008). Effects of spatial smoothing on fMRI group inferences. Magnetic Resonance Imaging, 26(4), 490-503. https://doi.org/10.1016/j.mri.2007.08.006*