Proceedings of ICMMGH 2026 Symposium: Biomedical Imaging and AI Applications in Neurorehabilitation
DOI: 10.54254/2753-8818/2026.AU29595

Research Progress on Electrophysiology and Deep Brain Stimulation of Freezing of Gait in Parkinson's Disease

Junjie Yang

School of Biomedical Engineering, Capital Medical University, Beijing, China
15008519906@163.com

Abstract. For patients with Parkinson's Disease (PD), Freezing of Gait (FoG) is a non-negligible issue and a severe, challenging symptom during the progression of the disease, which seriously affects patients' lives. This review focuses on FoG, a disabling motor symptom, and systematically elaborates on the underlying electrophysiological mechanisms involving multi-brain region circuits and neuromodulatory treatment strategies. It emphasizes the abnormal electrophysiological activities of three core nuclei, namely the Subthalamic Nucleus (STN), Globus Pallidus Internus (GPi), and Pedunculopontine Nucleus (PPN), including the dynamic changes of oscillations in specific frequency bands and their roles in gait regulation. This reveals the pathological nature of FoG as a "cognitive and motor integration network disorder". Meanwhile, this article deeply explores Deep Brain Stimulation (DBS) therapy targeting different nuclei, including the impact of the selection of stimulation targets, frequencies, and modes on therapeutic effects. Finally, it summarizes the limitations of current research and provides an outlook on future treatment directions such as the development of closed-loop DBS.

Keywords: Freezing of Gait, Electrophysiology, Deep Brain Stimulation, Multi-nuclei

1. Introduction

Freezing of Gait (FoG) in Parkinson's Disease (PD) is an extremely intractable motor disorder symptom that seriously endangers patients' quality of life and safety. With the gradual understanding and research on this symptom, it has been found that approximately 30%-70% of PD patients develop FoG during the course of the disease, and the incidence of FoG increases significantly with the duration of the illness.

FoG usually occurs when patients are walking, turning, or initiating movement, with a sudden transient motor block in the lower limbs, as if the feet are firmly stuck to the ground. Although patients have the intention to walk, they cannot take steps smoothly. This not only greatly limits patients' daily activity ability but also may cause falls, seriously affecting their independence and autonomy in life [1]. In recent years, a large number of clinical evidences have shown that the occurrence of FoG is not caused by abnormalities in a single brain region. There are complex connections between brain regions involved in gait execution, so FoG may be caused by abnormalities in multi-brain region circuits. With the development of neuroimaging and electrophysiological technologies, the core roles of the Subthalamic Nucleus (STN), Globus Pallidus

© 2025 The Authors. This is an open access article distributed under the terms of the Creative Commons Attribution License 4.0 (https://creativecommons.org/licenses/by/4.0/).

DOI: 10.54254/2753-8818/2026.AU29595

Internus (GPi), and Pedunculopontine Nucleus (PPN) in gait regulation have gradually become clear: through functional differentiation, specific electrophysiological activity patterns, and close brain network connections, the three nuclei together form a "core multi-circuit assembly" for gait regulation. Abnormalities in the structure or function of this part are the main causes of FoG.

2. Research progress on electrophysiology and DBS in STN

2.1. Electrophysiological abnormalities of STN in FoG

Current studies have shown that the STN can be divided into the posterior sensorimotor region and the central associative region according to its functions [2]. The β activity in the posterior STN mainly regulates the automatic execution of gait; the β activity in the central STN is closely related to cognitive regulation during gait. The essence of synchronous oscillation of the β (13-35Hz) band in FoG is an anti-motor effect, which causes neurons in the sparse asynchronous state under the information coding mode to suddenly synchronize, leading to the collapse of motor information processing. In gait initiation (GI) of FoG-susceptible patients, the correlation between rhythm and balance parameters and low β activity is significantly stronger than that in non-FoG patients. The low β activity related to rhythm is mainly concentrated in the central STN, while the low β activity related to balance is concentrated in the posterior STN. Before the onset of FoG, the low β band activity in the STN increases sharply, and the correlation pattern between high β activity in the STN and GI parameters undergoes a "spatial reversal": the high β activity related to walking speed and rhythm shifts from the central STN to the posterior STN, while the high β activity related to balance shifts from the posterior STN to the central STN [3].

The θ wave is also an important biomarker for the occurrence of FoG. Xie et al. [4] found that in patients with FoG induced by a dual-task context, the θ activity of the STN is more strongly coupled with the conflict processing network of the prefrontal cortex. In the α band, Nwogo et al. [5] found that the normal correlation between the α activity of the posterior STN and gait propulsion is weakened in FoG patients, and the regulatory effect of α oscillation on automatic gait control is impaired. In addition, the reduced α synchronization between the STN and the cortex may lead to sensorimotor integration disorders, further aggravating the severity of FoG.

2.2. Research on STN-DBS regulation of FoG

DBS can modulate the abnormal oscillations of the STN and improve the FoG symptoms of PD patients. Traditional high-frequency DBS (e.g., 130Hz) in the STN improves overall motor symptoms by inducing asynchronous release of GABA to inhibit abnormal β oscillations [6]. For patients with FoG combined with cognitive impairment, the θ frequency can improve cognitive ability during gait execution, enhance the activation of the prefrontal cortex, and optimize the ability to resolve dual-task conflicts [4]. In addition, very low-frequency (4Hz) stimulation can also increase the θ power in the motor cortex but will reduce the movement speed of the lower limbs [7].

As more and more clinical results confirm, the use of high-frequency or low-frequency STN-DBS alone has certain limitations in the treatment of FoG. Although high-frequency STN-DBS has a good therapeutic effect on limb symptoms, it may aggravate FoG by excessively inhibiting the cognitive and motor integration functions of the central STN; low-frequency STN-DBS can alleviate gait and balance disorders but will worsen limb symptoms [8]. To address this issue, researchers have designed a new interleaved dual-frequency stimulation mode (IL-IL) [9], where a high-frequency stimulation is formed in the overlapping area of two interleaved low-frequency

DOI: 10.54254/2753-8818/2026.AU29595

stimulations, surrounded by low-frequency stimulation, to control both types of symptoms simultaneously.

$$S(t) = S_1(t) + S_2(t) \tag{1}$$

$$S_2(t) = S_1(t - \sigma_t) \tag{2}$$

(1) $S(t)$ is the superimposed stimulation pulse, $S_1(t)$ and $S_2(t)$ are two interleaved stimulation pulses respectively.

(2) $\sigma_t \in (0, T)$, where T is the period of the S_1 stimulation pulse.

To further explore the dual-frequency stimulation mode with variable interleaved intervals, the interleaved interval is increased sequentially to cope with the enhanced β oscillation, and the interleaved threshold is selected based on clinical results. When the threshold is not reached, only low-frequency stimulation is generated. As shown in Figure 1.

$$G = u(t) \bullet \left(\frac{\beta_{instant}(t) - A \bullet \beta_{threshold}(t)}{\beta_{instant}(t)} \right) \tag{3}$$

$$S_A(t) = S(t) + S(t - \frac{T}{2} G) \tag{4}$$

(3) $S_A(t)$ is the superimposed stimulation pulse, $S(t)$ is the low-frequency stimulation pulse, T is the period of $S(t)$, and G is the interval parameter, which should satisfy $0 \leq G \leq 1$.

(4) $u(t)$ is the step function, $\beta_{instant}(t)$ is the instantaneous β oscillation intensity, $\beta_{threshold}(t)$ is the β oscillation intensity threshold, and A is the adjustment parameter.

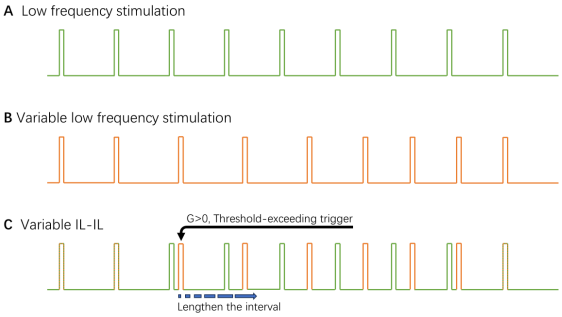

Figure 1. Low frequency stimulation (A), Variable Low frequency stimulation (B), Variable IL-IL (C)

For different targets in the STN, Cherif et al. [10] designed three groups of experiments: directional DBS in the central STN, directional DBS in the posterior STN, and ring-mode DBS in the STN. Among them, patients with directional DBS in the central STN were closer to healthy people in terms of forward propulsion during gait initiation and static posture control; although ring-mode DBS reduced the number of FoG episodes compared with directional DBS in the posterior STN, it would overactivate the prefrontal cortex, interfere with posture adjustment through cognitive

DOI: 10.54254/2753-8818/2026.AU29595

compensation of the prefrontal cortex, disrupt the smoothness of gait, and have a certain risk of aggravating the condition.

The latest studies have shown that we should not be limited to the analysis of electrical activities in various frequency bands, but should pay more attention to the changes in their nonlinear dynamics. Compared with non-FoG patients, FoG patients have higher sample entropy of β rhythm in the STN when FoG does not occur, and the power of β rhythm is inversely proportional to the sample entropy, reflecting an increase in the unpredictability of neural discharge patterns; a few seconds before the onset of FoG, the entropy value of the α band further soars, forming a progressive change chain of "β entropy increase converting to α entropy increase" [11]. This feature can be considered as a more accurate biomarker for closed-loop DBS.

3. Research progress on electrophysiology and DBS in GPi

3.1. Electrophysiological abnormalities of GPi in FoG

As the core output nucleus of the basal ganglia, the GPi is based on regular high-frequency spontaneous discharge and realizes tonic inhibition of downstream motor nuclei by accurately encoding "motor inhibition signals". Generally, the academic community believes that the abnormal β wave, a key biomarker in the GPi, originates from the cortex-basal ganglia circuit. Current studies have shown that the globus pallidus-striatum feedback loop can also induce β frequency oscillations in the GPi, which is closely related to rigidity, a major motor symptom [12]. There are relatively few studies on γ activity in the GPi, but the academic community currently speculates that γ activity in the GPi is related to the fine control of motor execution. The GPi causes disorders in the integration of somatosensory input and motor output through abnormal synchronous discharge between the γ band and the cortex, and DBS treatment may improve motor coordination by restoring the normal synchronization of the γ band.

In a study on the characteristics of GPi activity, Lu et al. [13] found that the β band power of the GPi shows periodic modulation with the gait phase: the power decreases during the swing phase and increases during the stance phase. More importantly, when visual cues with color changes were used to prompt patients, the modulation depth of the β band was significantly enhanced, and the number of freezing episodes decreased. This indicates that the GPi adopts adaptive coding according to changes in the gait cycle and is affected by visual cues, while traditional constant-frequency stimulation may have limited effects due to the lack of dynamics. In addition, Cagle et al. [14] observed circadian rhythm fluctuations in the GPi during chronic intracranial recordings of the GPi. For patients taking sustained-release levodopa, the activity in the higher frequency band (>20 Hz) may decrease at night.

Compared with the STN, researchers have also found that the GPi has higher β power at rest and during movement, and more significant β desynchronization during movement. Therefore, the β activity in the GPi is more strongly correlated with bradykinesia and rigidity. Thus, the β signal in the GPi is easier to detect, and researchers judge that it may be more suitable as a target in closed-loop DBS [15]. However, Oswal et al. [16] found in their study that the high β power in the STN is significantly higher than that in the GPi. Therefore, further research is needed for the selection of targets.

DOI: 10.54254/2753-8818/2026.AU29595

3.2. Research on GPi-DBS regulation of FoG

The beneficial effect of traditional high-frequency stimulation of the GPi on the main motor symptoms in PD has been fully confirmed. However, traditional continuous DBS may cause certain side effects, and the energy consumption of the battery is too high, so it is necessary to further develop new stimulation schemes. Based on existing research results, Wang et al. [17] designed three stimulation modes and compared them with the traditional stimulation mode. Among them, the burst-cycling DBS (BCDBS) was studied emphatically: BCDBS is not inferior to traditional DBS in improving motor symptoms and can significantly reduce battery consumption. This stimulation mode modulates narrower high-frequency pulses on wider low-frequency pulses to generate high-frequency pulses that burst at certain time intervals.

$$S_{BCDBS}(t) = \sum_{n=0}^{+\infty} r_1(t - T_{intra} \bullet n) \bullet \sum_{m=0}^{+\infty} r_2(t - T_{burst} \bullet m) \tag{5}$$

$$r(t) = \begin{cases} A, |t| \le \frac{T}{2} \\ 0, |t| > \frac{T}{2} \end{cases} \tag{6}$$

(5) $S_{BCDBS}(t)$ is the modulated stimulation pulse, r_1 and r_2 are rectangular pulses with different pulse widths respectively, the pulse width of r_1 is much smaller than that of r_2, and r_1 can be approximated as an impulse function. $T_{intra} = \frac{1}{f_{intra}}$, where f_{intra} is the frequency of pulses within the burst; $T_{burst} = \frac{1}{f_{burst}}$, where f_{burst} is the burst frequency of BCDBS.

(6) $r(t)$ is a rectangular pulse with a stimulation intensity of A and a pulse width of T.

For the above mode, the team further designed two walking tasks, namely clinical walking and Zeno walkway walking, to count the number of freezing episodes under 5 test conditions. Although the test results showed no significant statistical significance, the 4Hz condition maintained the lowest number of freezing episodes in both walking tasks. It can be considered that an increase in intra-burst frequency may be associated with the number of freezing episodes. As shown in Figure 2.

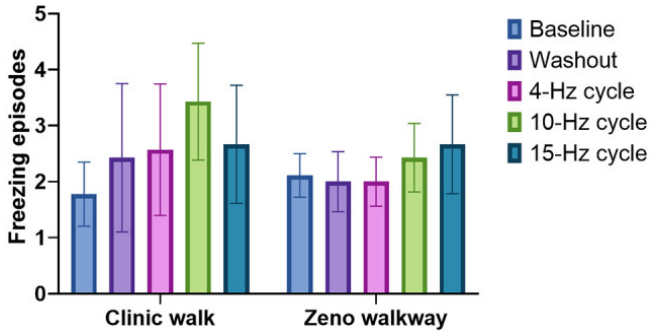

Figure 2. The effect of BCDBS on FOG: the number of freezing episodes during two different walking tasks are shown for all five test conditions. There were no significant differences among all five groups

According to the model parameters, the burst duration, frequency within the burst, etc., can also be controlled for larger-scale exploration. Spencer et al. [18] tested a 40-second continuous high-frequency stimulation sequence for the burst duration and found that the inhibitory evoked potentials in the GPi were enhanced, the β oscillations were weakened, and the hand movement performance

DOI: 10.54254/2753-8818/2026.AU29595

was improved. This improvement persisted after the stimulation ended, resulting in a long-term potentiation (LTP) effect.

Current relevant studies have shown that very low-frequency stimulation may have a good effect on remodeling the motor-cognitive circuit, but most very low-frequency stimulations adopt a non-invasive design. Inspired by the IL-IL stimulation mode in the STN [9], and based on the better in-burst stimulation frequency of 4Hz obtained by Wang et al. [17], the therapeutic effect of interleaved BCDBS (IBCDBS), which is composed of very low-frequency stimulation surrounding and very low-frequency pulses interleaved into the BCDBS stimulation sequence while maintaining the in-burst stimulation frequency unchanged, can be explored. As shown in Figure 3.

$$S_{IBCDBS}(t) = S_{BCDBS}(t) + S_{low-1}(t) + S_{low-2}(t) \tag{7}$$

(7) $S_{IBCDBS}(t)$ is the superimposed stimulation sequence, $S_{BCDBS}(t)$ is the BCDBS stimulation sequence, $S_{low-1}(t)$ and $S_{low-2}(t)$ are the same low-frequency stimulation sequences respectively.

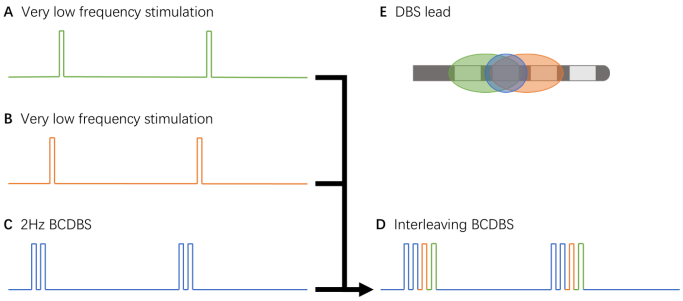

Figure 3. Very low frequency stimulation (A-B), 2Hz BCDBS (C), Interleaving BCDBS (D), DBS lead (E)

At the same time, in the DBS of the GPi, special attention should be paid to the treatment plan for dopamine-insensitive patients. According to the study by Lench et al. [19], it is speculated that the decrease in the number of GPi neurons or the simplification of dendritic branches leads to a decrease in the diversity of electrical activities, making it difficult to respond to dopamine regulation. Therefore, the optimization of these parameters needs to be combined with individual analysis. For example, there are cases where pulse modulation technology is optimized through neurophysiological models to more effectively regulate specific neural oscillations and adapt to different neural dynamics [20]; machine learning is introduced to establish a multi-dimensional model of demographic and connectivity characteristics to predict individual postoperative improvement [21]. These examples all emphasize the value of formulating more detailed treatment plans according to the differences in the conditions of different FoG patients. However, how to accurately identify the individual treatment needs of FoG patients and predict the efficacy of interventions such as GPi-DBS has always been a key problem in clinical translation.

DOI: 10.54254/2753-8818/2026.AU29595

4. Research progress on electrophysiology and DBS in PPN

4.1. Electrophysiological abnormalities of PPN in FoG

The PPN has bidirectional projections with multiple brain regions, and its potential value in assisting the inhibition of pathological oscillations in the nucleus network has been continuously explored in recent years. Generally, the α and β oscillations of the PPN show rhythmic fluctuations during the gait cycle, with a higher modulation index in regular gait, these two oscillations are involved in the regulation of the stance phase and swing phase respectively [22]. However, this modulation effect is weakened in PD patients, leading to gait rhythm disorders. In a study by Wu et al. [23], it was found that the power of multiple frequency bands in the electroencephalogram signals of mice with 6-hydroxydopamine (6-OHDA) injury increased significantly during movement, among which the γ band had the most significant increase. The transient enhancement of the γ band may be a compensation for β synchronization, but its effectiveness is limited by the integrity of network connections. Abnormal structural connections between the right PPN and the caudate nucleus are related to the decrease in step frequency and step length, and abnormal connections with the amygdala are related to the decrease in step length. These connection abnormalities can be partially reversed by low-frequency stimulation of the PPN [24].

The vGluT2 neurons in the rostral PPN are highly correlated with movement and ipsilateral head-turning behavior. Among them, the pathway projecting to the caudal pontine reticular nucleus (PnC) or the gigantocellular reticular nucleus anterior (GiA) plays a role in inhibiting movement; another pathway projecting to the zona incerta (Zi) helps to promote movement. The overall activation network of vGluT2 neurons in the rostral PPN presents a "pause-switch-play" motor regulation mode [25]. In another study, Yako et al. [26] noticed changes in the neural discharge pattern. In the PD model they studied, the proportion of burst discharge of PPN neurons increased, while the tonic discharge decreased, which may disrupt the stable output of motor commands. Moreover, the author found an increase in neuron density 8-9 mm below the ventral border of the thalamus, indicating that this area can be used as a stable biomarker and applied to the development of closed-loop DBS in the future.

4.2. Research on PPN-DBS regulation of FoG

In the research on the treatment of FoG, the PPN, as an emerging target for improving axial motor disorders, is used for PD patients who do not respond to dopaminergic drugs or stimulation of the STN or GPi. Generally, DBS treatment targeting the PPN uses low-frequency pulses to regulate the thalamocortical projection, enhance the activity of the motor cortex, and regulate FoG. PPN-DBS can reduce the vestibular perception threshold and significantly improve patients' postural stability and gait ability, but has no significant effect on step width.

At the same time, relevant studies have also pointed out problems such as the blurred boundary of the PPN nucleus and the narrow scope of clinically applicable populations. Therefore, further refinement is needed in the research on PPN-DBS. Yu et al. [27] clearly proposed that the caudal PPN is an ideal stimulation target, further refined the stimulation positioning of the PPN, and found that low-frequency stimulation (10-30Hz) of it can significantly improve postural instability and gait disorders in PD patients. In the exploration of clinical stimulation schemes, Yako et al. [26] used bipolar stimulation with a frequency range of 10-30Hz for PPN-DBS treatment in two patients. The results showed that both patients' gait disorders were improved, but the long-term sustainability of the effect was questionable based on the results of this treatment scheme.

DOI: 10.54254/2753-8818/2026.AU29595

5. Limitations and outlook

5.1. Limitations

• Hemispheric pathological differences exist in brain regions associated with FoG. Future studies should focus on investigating the specific characteristics of FoG in unilaterally affected PD patients, including seizure frequency, duration, and triggering contexts, and further assess the association between symptom lateralization and key electrophysiological indicators such as brain electrical activity and nerve conduction.

• Previous studies have shown conflicting conclusions regarding the inhibition or promotion of brain nuclei. However, emerging research collectively supports the existence of functionally distinct subregions within the PPN and MLR, which explains the conflicting findings in PPN-related studies. Meanwhile, the GPi also exhibits a homogenization effect caused by enhanced β oscillations through synchronized firing, masking functional differences between subregions. Further exploration is needed to reveal the synergistic and antagonistic mechanisms among GPi subregions, clarify these subregions, and strengthen the understanding of the functions of specific brain regions.

• The nuclei involved in existing studies are the STN, GPi, and PPN, and DBS targets and neural models in research typically focus on these nuclei, while neglecting brain regions such as the striatum, cortex, and GPe. Recent studies have found that the GPe, with its extensive connections to multiple brain regions, plays an important role in FoG-DBS through its central regulatory function, though more complex stimulation strategies may be required. Additionally, some imaging evidence indicates a specific association between the PPN and the cerebellum via the pontocerebellar tract. Given the cerebellum's role in a wide range of motor and cognitive tasks, it is hypothesized that the "cerebellum-brainstem-basal ganglia" circuit may be involved in FoG regulation through a "motor initiation-correction" mechanism, providing a new direction for DBS and indicating potential new targets for development.

• FoG does not result from a single brain function abnormality, but rather from the selective activation of functional defects in multiple brain regions under specific motor scenarios, leading to integration disorders. Current research faces several bottlenecks: the ambiguous anatomical boundaries of the PPN make localization difficult; its signaling pathways with the caudate nucleus and amygdala, as well as its descending spinal projections, remain unclear; and there is a lack of a unified theoretical explanation for its interaction mechanism with the "basal ganglia-cerebellum-thalamus-cortex" circuit, such as the regulation of striatal dopamine balance via cholinergic or glutamatergic signals. Furthermore, studies mostly rely on single biomarkers, and network connectivity analysis of oscillatory signals is often limited to pairwise nuclei, making it difficult to cover the neural mechanisms of different subtypes and lacking analysis from a whole-brain network perspective.

• In the design of closed-loop DBS, the ratio of brain electrical activity in different nuclei is usually used as an early warning signal for FoG. However, new studies have shown that the brain electrical activity of nuclei exhibits nonlinear dynamic characteristics, so early warning systems relying solely on a certain power threshold are prone to false positives, and complexity indicators such as entropy need to be introduced to improve accuracy. In addition, symptoms such as FoG in PD have a lag, making it difficult to feedback DBS effects in real time. Therefore, a more accurate and unified standardized system needs to be established for DBS parameter regulation.

DOI: 10.54254/2753-8818/2026.AU29595

5.2. Outlook

Despite important progress, the electrophysiological research and treatment of FoG still face challenges. In the future, it is necessary to further integrate multi-modal information and analyze the real-time interaction mechanism of multi-brain region circuits under more natural movement states. Focus on the nonlinear interactions between oscillations in different frequency bands, such as cross-frequency coupling and phase-amplitude coupling, and how they ultimately lead to the "collapse" of motor programs. Breakthroughs in these basic studies will provide a theoretical basis for the design of new algorithm models.

As an ideal method for the treatment of FoG, closed-loop DBS is still in the exploration stage in terms of current research and clinical application. However, its therapeutic advantages in real-time adaptation to disease changes, reduction of side effects, and improvement of long-term therapeutic efficacy determine that it will become a highly potential development direction in the field of FoG treatment in the future. The next step is to focus on discovering and verifying stable and reliable FoG-specific biomarkers that can be used in clinical practice for real-time triggering of stimulation. At the same time, the synergistic stimulation of multiple targets and stimulation modes that can better explain the brain network mechanism should be explored to regulate the pathological network more naturally. In terms of improving response accuracy, attempts can be made to realize closed-loop regulation from the "electrophysiology + movement" dual mode, and at the same time, other biological signal sensors can be integrated to create multi-modal closed-loop regulation.

6. Summary

FoG is a complex, disabling motor symptom caused by functional abnormalities of multi-brain region circuits. In recent years, significant progress has been made in electrophysiological research, which has gradually revealed the key roles of the three core nuclei (STN, GPi, and PPN) in the occurrence and regulation of FoG.

At present, most studies have moved beyond the simple association of a single nucleus or frequency band and delved into the division of functional subregions within the nucleus, the dynamic changes of oscillations in specific frequency bands, and their fine association with gait parameters. FoG is understood as a "brain network disease combining cognition and movement". Its onset is related to abnormal β oscillations in the posterior sensorimotor region and central associative region of the STN, continuous activation of the Supplementary Motor Area (SMA), excessive coupling between θ activity and the prefrontal cortex; abnormal β and γ oscillations in the GPi, pathological patterns caused by circadian changes; abnormal activation of neurons in the PPN, abnormal α and β activities that modulate the gait cycle, abnormal transient enhancement of the γ band, etc. These reflect the electrophysiological characteristics and potential biomarkers of different nuclei in FoG.

The efficacy of DBS for each nucleus depends on the selection of stimulation targets, frequencies, and modes. In DBS, traditional high-frequency stimulation may aggravate some FoG symptoms, and combining with low-frequency stimulation can help improve FoG while addressing multiple symptoms. As a supplementary target for regulating FoG, low-frequency stimulation of the PPN is mainly used to improve patients who do not respond well to dopaminergic drugs and the above-mentioned DBS, but the positioning of its optimal target and long-term efficacy still need to be explored.

In view of the complex network mechanism of FoG, new algorithm models can regulate the abnormal brain network more comprehensively. At the same time, combining artificial intelligence

DOI: 10.54254/2753-8818/2026.AU29595

can provide a new treatment direction for refractory FoG.

References

[1] Teive HAG, Cunha P, Ferreira MG, et al. Freezing of gait (FOG) in Parkinson's disease patients-the contribution of Garcin and Melaragno. Neurol Sci. 2021; 42(12): 5413-5417. doi: 10.1007/s10072-021-05381-1

[2] Prasad AA, Wallén-Mackenzie Å. Architecture of the subthalamic nucleus. Commun Biol. 2024; 7(1): 78. Published 2024 Jan 10. doi: 10.1038/s42003-023-05691-4

[3] Collomb-Clerc A, Yeche M, Demain A, et al. Subthalamic Electrophysiological Mapping of Gait Initiation Dynamics and Freezing in Parkinson's Disease. Ann Neurol. Published online July 25, 2025. doi: 10.1002/ana.70003

[4] Xie H, Bai Y, Zhuang Y, et al. Theta-frequency subthalamic stimulation enhances conflict resolution in Parkinson's disease patients with freezing of gait through frontal cortex modulation. NPJ Parkinsons Dis. 2025; 11(1): 206. Published 2025 Jul 10. doi: 10.1038/s41531-025-01067-z

[5] Nwogo RO, Kammermeier S, Singh A. Abnormal neural oscillations during gait and dual-task in Parkinson's disease. Front Syst Neurosci. 2022; 16: 995375. Published 2022 Sep 15. doi: 10.3389/fnsys.2022.995375

[6] Xu Z, Duan W, Yuan S, et al. Deep brain stimulation alleviates Parkinsonian motor deficits through desynchronizing GABA release in mice. Nat Commun. 2025; 16(1): 3726. Published 2025 Apr 19. doi: 10.1038/s41467-025-59113-6

[7] Bosch TJ, Cole RC, Bezchlibnyk Y, Flouty O, Singh A. Effects of Very Low- and High-Frequency Subthalamic Stimulation on Motor Cortical Oscillations During Rhythmic Lower-Limb Movements in Parkinson's Disease Patients. J Parkinsons Dis. 2023; 13(4): 549-561. doi: 10.3233/JPD-225113

[8] Varriale P, Collomb-Clerc A, Van Hamme A, et al. Decreasing subthalamic deep brain stimulation frequency reverses cognitive interference during gait initiation in Parkinson's disease. Clin Neurophysiol. 2018; 129(11): 2482-2491. doi: 10.1016/j.clinph.2018.07.013

[9] Karl JA, Ouyang B, Verhagen Metman L. A Novel Dual-Frequency Deep Brain Stimulation Paradigm for Parkinson's Disease. Neurol Ther. 2019; 8(2): 483-489. doi: 10.1007/s40120-019-0140-5

[10] Cherif S, Tempier N, Yeche M, et al. Directional Subthalamic Deep Brain Stimulation Better Improves Gait and Balance Disorders in Parkinson's Disease Patients: A Randomized Controlled Study. Ann Neurol. Published online October 30, 2024. doi: 10.1002/ana.27099

[11] Syrkin-Nikolau J, Koop MM, Prieto T, et al. Subthalamic neural entropy is a feature of freezing of gait in freely moving people with Parkinson's disease. Neurobiol Dis. 2017; 108: 288-297. doi: 10.1016/j.nbd.2017.09.002

[12] Blenkinsop A, Anderson S, Gurney K. Frequency and function in the basal ganglia: the origins of beta and gamma band activity. J Physiol. 2017; 595(13): 4525-4548. doi: 10.1113/JP273760

[13] Lu C, Amundsen-Huffmaster SL, Louie KH, et al. Modulation of Beta Oscillations in the Pallidum During Externally Cued Gait. Front Signal Process (Lausanne). 2022; 2: 813509. doi: 10.3389/frsip.2022.813509

[14] Cagle JN, de Araujo T, Johnson KA, et al. Chronic intracranial recordings in the globus pallidus reveal circadian rhythms in Parkinson's disease. Nat Commun. 2024; 15(1): 4602. Published 2024 May 30. doi: 10.1038/s41467-024-48732-0

[15] Eisinger RS, Cagle JN, Opri E, et al. Parkinsonian Beta Dynamics during Rest and Movement in the Dorsal Pallidum and Subthalamic Nucleus. J Neurosci. 2020; 40(14): 2859-2867. doi: 10.1523/JNEUROSCI.2113-19.2020

[16] Oswal A, Cao C, Yeh CH, et al. Neural signatures of hyperdirect pathway activity in Parkinson's disease. Nat Commun. 2021; 12(1): 5185. Published 2021 Aug 31. doi: 10.1038/s41467-021-25366-0

[17] Wong JK, Hu W, Barmore R, et al. Safety and Tolerability of Burst-Cycling Deep Brain Stimulation for Freezing of Gait in Parkinson's Disease. Front Hum Neurosci. 2021; 15: 651168. Published 2021 Apr 26. doi: 10.3389/fnhum.2021.651168

[18] Spencer KA, Boogers A, Sumarac S, et al. Modulating inhibitory synaptic plasticity to restore basal ganglia dynamics in Parkinson's disease. Brain. 2025; 148(7): 2299-2305. doi: 10.1093/brain/awaf103

[19] Lench DH, Keith K, Wilson S, et al. Neurodegeneration of the Globus Pallidus Internus as a Neural Correlate to Dopa-Response in Freezing of Gait. J Parkinsons Dis. 2022; 12(4): 1241-1250. doi: 10.3233/JPD-213062

[20] Farooqi H, Vitek JL, Escobar Sanabria D. Deep brain stimulation pulse sequences to optimally modulate frequency-specific neural activity. J Neural Eng. 2024; 21(3): 036045. Published 2024 Jun 19. doi: 10.1088/1741-2552/ad54f0

DOI: 10.54254/2753-8818/2026.AU29595

[21] Jo S, Choi M, Lee J, et al. Connectivity-based analysis of stimulation effects of globus pallidus interna deep brain stimulation in Parkinson's disease: A focus on freezing of gait. J Mov Disord. Published online July 30, 2025. doi: 10.14802/jmd.25005

[22] He S, Deli A, Fischer P, et al. Gait-Phase Modulates Alpha and Beta Oscillations in the Pedunculopontine Nucleus. J Neurosci. 2021; 41(40): 8390-8402. doi: 10.1523/JNEUROSCI.0770-21.2021

[23] Wu Y, Lu L, Qing T, Shi S, Fang G. Transient Increases in Neural Oscillations and Motor Deficits in a Mouse Model of Parkinson's Disease. Int J Mol Sci. 2024; 25(17): 9545. Published 2024 Sep 2. doi: 10.3390/ijms25179545

[24] Joza S, Camicioli R, Martin WRW, Wieler M, Gee M, Ba F. Pedunculopontine Nucleus Dysconnectivity Correlates With Gait Impairment in Parkinson's Disease: An Exploratory Study. Front Aging Neurosci. 2022; 14: 874692. Published 2022 Jul 8. doi: 10.3389/fnagi.2022.874692

[25] Huang Y, Wang S, Wang Q, et al. Glutamatergic Circuits in the Pedunculopontine Nucleus Modulate Multiple Motor Functions. Neurosci Bull. 2024; 40(11): 1713-1731. doi: 10.1007/s12264-024-01314-y

[26] Yako T, Kitazawa K, Kobayashi S, et al. Role of Microelectrode Recording in Deep Brain Stimulation of the Pedunculopontine Nucleus: A Physiological Study of Two Cases. Neuromodulation. 2022; 25(6): 925-934. doi: 10.1111/ner.13479

[27] Yu K, Ren Z, Hu Y, et al. Efficacy of caudal pedunculopontine nucleus stimulation on postural instability and gait disorders in Parkinson's disease. Acta Neurochir (Wien). 2022; 164(2): 575-585. doi: 10.1007/s00701-022-05117-w