Proceedings of the 6th International Conference on Biological Engineering and Medical Science
DOI: 10.54254/2753-8818/2026.32660

AI-Driven Prediction of Enzyme Structure and Function and Its Applications

Xiuquan Zhong

School of Life Sciences, Northwestern Polytechnical University, Xi'an, China
3411984035@qq.com

Abstract. Enzymes are chemical catalysts that are essential in all the biochemical changes that occur in the biological world. Their catalytic activities are closely connected with the three-dimensional (3D) organization, which terms active sites, substrate-binding pockets, and other mechanically relevant conformational states. Protein sequences have been sequenced affordably at an unprecedented rate using high-throughput methods; but experimentally measured structures and high-quality functional annotation are relative rarities, resulting in an ongoing gap in the so-called sequence to structure to functional gap. In recent years (in the last five years), the deep-learning branch of artificial intelligence (AI) brought disruptive improvements that created a significant undercut in this gap. The structure predictors of deep learning structure predictors such as AlphaFold2 have demonstrated high-confidence structural models of a large number of proteins, including enzymes, leading to lower time and resource costs associated with structure determination. Simultaneously, prediction of enzyme functions has moved away both homology-driven transfer prediction and manually hand-crafted features, to representation learning with sequences and structures, such as protein language models, graph neural networks, and contrastive learning models, but also integrative (multimodal) prediction with the combination of complementary signals. The review presents the latest developments in AI-based enzyme structure prediction and AI-based enzyme function prediction and describes its scientific and practical importance introduced by such developments. We emphasize such representative uses as enzyme engineering, synthetic biology, and drug discovery and development. We also specify outstanding constraints like the prediction of multimeric assemblies, conformational heterogeneity and dynamics, and realistic enzyme-ligand interfaces, and the outlook of future directions through additional training information, combining physical constraints, and close integration of AI prediction with experimental justification.

Keywords: Enzyme structure prediction, Enzyme function prediction, Deep learning, Protein language model, Multimodal learning

1. Introduction

Enzymes are biological catalysts and they are very crucial in almost all given life processes. their catalytic selectivity and efficacy are facilitated by unique three-dimensional (3D) structures, placing

© 2026 The Authors. This is an open access article distributed under the terms of the Creative Commons Attribution License 4.0 (https://creativecommons.org/licenses/by/4.0/).

DOI: 10.54254/2753-8818/2026.32660

the relevant residues, stabilizing transition states and crafting substrate-binding pockets. However, there is a considerable gap in biology in the present modern day. Genome sequencing technologies have rapidly expanded, which has increased the number of protein sequences in databases exponentially: databases like UniProt include over a hundred million protein sequences, of which less than half are functionally annotated through manual efforts [1]. In comparison, current experience in 3D structure of proteins resolved experimentally has been on the order of ~105 structures, which is both a small portion of known sequence and a minute fraction of known sequence. Historically, the determination of protein structure has traditionally been based on an experimental method, i.e. X-ray crystallography, nuclear magnetic resonance (NMR) spectroscopy, and cryo-electron microscopy (cryo-EM), and it typically takes months to years to solve a single protein structure. With this it is now in urgent need of scalable computational tools to model protein structure and function, and enzymes in particular, so as to fill this growing gap between ever-growing sequences and limited structural/functional annotation.

The advent of artificial intelligence (AI) and in particular, deep learning, has provided a groundbreaking alternative to this old dilemma. Researchers have tried various algorithmic approaches in predicting protein structure and function over the last decades, although the performance was not very good. In comparison, within the past five years, deep learning architectures, such as AlphaFold, have recorded breakthroughs in high-quality protein structure prediction. Such innovations have been generally considered a significant breakthrough in the field of life science due to the revolutionary effect of large-scale genomics. Likewise, with deep learning, it has never been demonstrated to predict enzyme functions better than ever before: AI models can obtain meaningful features from their sequences and structures automatically, and prediction can be considerably better than before. In this respect, AI is leading to a new wave of enzymology, not only in terms of speeding up basic research but also in terms of widespread use in enzyme engineering, synthetic biology and drug design.

This review is based on the research advancements in AI based enzyme structure prediction and enzyme function prediction in the last five years, and the role of these developments in value application. We first retract to old methods of enzyme structure prediction then center on advances made in the same field by deep learning and the consequence of artificial intelligence predicted enzyme structures. We then evaluate the current developments in enzyme activity predictions using sequence, structure and multimodal information. Lastly, we give a representative application examples of AI-based prediction of enzyme structure and functions in enzyme engineering, synthetic biology and drug discovery and finally, we give a perspective of the direction to be taken.

2. Research progress in AI-based enzyme structure prediction

2.1. Traditional methods for enzyme structure prediction

Before the deep-learning era, enzyme structure prediction mainly relied on traditional computational approaches informed by evolutionary relationships and physical principles [2], which are now increasingly integrated into end-to-end deep learning frameworks (Fig. 1). Homology modeling was the dominant strategy: when experimentally solved structures of homologs are available, they can be used as templates to build a model for the target enzyme. Automated platforms such as SWISS-MODEL, developed over roughly the past 25 years, enabled routine template-based modeling and substantially reduced the gap between rapidly accumulating sequences and limited structural knowledge. However, performance is highly template-dependent, and accuracy typically declines sharply when no sufficiently similar template exists. For targets lacking close homologs, fold

DOI: 10.54254/2753-8818/2026.32660

recognition/threading and ab initio (de novo) folding were employed. Threading attempts to identify remote homologs or structural analogs by aligning a query sequence to libraries of known folds, whereas ab initio methods explore conformational space under an energy function to predict structure from first principles. Some web services integrate template-based modeling with ab initio modules, exemplified by FALCON2 [3]. Physics-based frameworks such as Rosetta combine fragment assembly and scoring functions and achieved partial success for small to medium proteins and for enzyme design, but they are computationally intensive and often fall short of near-atomic accuracy for larger or complex systems. Consistent with CASP benchmarks (established in 1994), progress under traditional paradigms was incremental for many years, and by ~2016 protein structure prediction remained widely viewed as a major unsolved challenge.

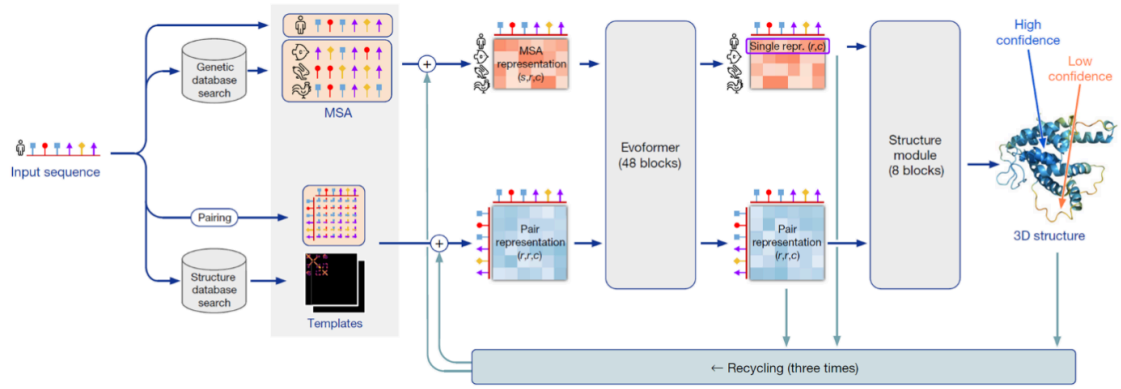

Figure 1. AI-enabled enzyme prediction accelerates pathway design, enzyme selection, and pathway optimization in synthetic biology [2]

2.2. Deep learning methods for enzyme structure prediction

After 2018, deep learning rapidly transformed enzyme structure prediction and achieved top performance in CASP assessments. The AlphaFold series delivered a major breakthrough: AlphaFold2 strongly outperformed competitors in CASP14 (2020) and, in many cases, produced near-atomic models even for proteins lacking close templates [2].The AlphaFold code and models were published in 2021, and alongside the European Bioinformatics Institute, it processed the AlphaFold Protein Structure Database, which made predictions of the structures of about 200 million sequences (including the human proteome) and dramatically increased the amount of accessible structural information [4]. These high-speed access to relatively high-quality 3D models can be used to make enzymology faster, allowing the active-site to be examined, catalytic residues to be analyzed and hypotheses to be generated to be used in downstream work or rational design.

Outside of AlphaFold, other scholarly teams have created complementary models, such as RoseTTAFold, which uses a three track architecture that simultaneously combines sequence, distance-map, and 3D coordinate representations to enhance structure prediction (Fig. 2) [5] and MSA-based end-to-end methods, including CopulaNet that does not use handcrafted features but learns co-evolutionary signals directly on MSAs [5].

DOI: 10.54254/2753-8818/2026.32660

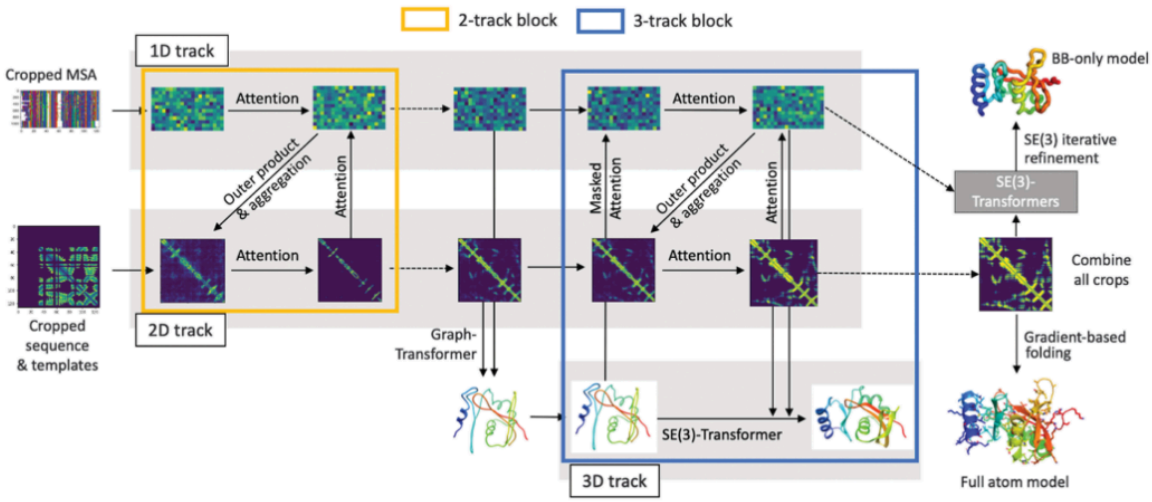

Figure 2. RoseTTAFold uses a three-track network that jointly integrates sequence, distance-map, and 3D coordinate representations for structure prediction [5]

Although they are widely applicable, the AlphaFold-class algorithms have their restrictions, especially in multimers, conformational dynamics, allostery, fold switching, and intrinsically disordered proteins, in part because of the training data being largely based on static PDB structures [6,7]. The next developments will have to rely on more complex data and more stringent physical limitations.

2.3. Significance of AI in enzyme structure prediction

Enzyme structure prediction with the assistance of AI has significant scientific and practical significance. To begin with, it allows quick access to quality structural models. Experimental determination of the structural elements of proteins may take months of effort, whereas AlphaFold-like systems are frequently able to produce useful models in hours or even minutes, enabling researchers to screen large numbers of enzymes on a single project, and to target catalytic residues and substrate-binding pockets to further validation or design.

Second, AI prognostication increases the coverage in structure. Massive resources have now been able to offer models of many challenge enzymes in the past that were hard to address in the past, even some membrane-associated or low-abundance enzymes. Such models can also provide mechanistic hypotheses and target an experiment even where they do not replace an experiment.

Third, the projected ones present a fresh research scaffold on functions. The close coupling of enzyme functioning with structure enables the support of mechanistic interpretation, finding of important residues as well as structure-directed prediction of enzyme-ligand interaction (e.g. using docking). This can be useful in the discovery of new enzymes, in the process of functional annotation [8].

Prediction of AI-based structures also started to have a real effect. During this early part of the COVID-19 pandemic, the AlphaFold team provided structural predictions of several SARS-CoV-2 non-structural proteins, which provided reference models subsequently validated by structural experimentation [9]. With bioenergy, a similar scenario may be envisioned when it comes to making active-site redesign directed by predicted xylanase structures in order to enhance the efficiency of breaking down biomass of plants (SP hypothetical example only).

DOI: 10.54254/2753-8818/2026.32660

By and large, AI cuts down the impediments to structural investigation, and makes structure-based reasoning reachable to extensive audience of the research community, expediting enzyme science and providing new prospects in biotechnology and medicine.

3. Research progress in AI-based enzyme function prediction

3.1. Sequence-based function prediction

Sequence-based enzyme function prediction aims to infer the catalyzed reaction(s) and/or physiological role from amino-acid sequence. Classical annotation has primarily relied on homology transfer, typically via BLAST-like similarity searches, in which functions are propagated from well-annotated homologs to uncharacterized sequences. While efficient, this strategy performs poorly for enzymes lacking close annotated relatives and often cannot resolve multifunctionality or subtle functional divergence within closely related families. To improve coverage, conventional machine-learning classifiers (e.g., support vector machines and random forests) were introduced using handcrafted descriptors such as amino-acid composition, conserved motifs, and other engineered features [10], but these approaches are limited by feature design and can generalize weakly to novel sequence space. Deep learning has enabled end-to-end learning directly from raw sequences. DeepEC (2019) employs convolutional networks on sequence fragments and incorporates homology searching when model confidence is insufficient, reportedly improving EC-number annotation accuracy and throughput. More recently, CLEAN (2023) uses contrastive learning to embed sequences such that enzymes sharing functions cluster together, facilitating annotation for understudied enzymes and supporting detection of misannotations and "moonlighting" functions. In parallel, large protein language models (e.g., ProtBert and ESM) learn general-purpose embeddings from massive sequence corpora and provide strong features for downstream function prediction, often outperforming models trained from scratch [11]. Language-model representations have also supported MSA-free structure prediction and metagenome-scale structural annotation [12].

3.2. Structure-based function prediction

The concept of structure-based enzyme function prediction is based on the close relation between 3D conformation and phenotypic activity to enhance inference with respect to sequence only. Classical methods involve (i) transferring function through global structural similarity, on the basis of structural classification systems (e.g. CATH/SCOP) and structural alignment tools such as DALI, and (ii) finding preserved active sites or ligand-binding pockets, and superimposing them onto functional templates. Visualizing systems like ProFunc and COFACTOR, combine geometric and physicochemical representations of binding pockets and have a set of curated template libraries annotated with them. Previously, these methods were hampered by the lack of experimental structures but AlphaFold-type predictors have had an increase in access to high confidence scale models, allowing systematic structure-based functional studies through large repertoires of enzymes. Recent deep-learning procedures directly couple structure and function. DeepFRI is a protein as a residue graph based on structural contacts (contact maps) and Price: structural-contact to sequence embedded graphs together with a graph convolutional network subsequently translates these representations to GO functional labels, which are superior in large-scale annotation to sequence-only counterparts [10]. DeepFRI was also found to be stable during prediction (as opposed to experimental) structures, with residue-level interpretability through class-activation mapping to visualize the potential functional locations. In a larger sense, 3D information has been integrated

DOI: 10.54254/2753-8818/2026.32660

with either voxel-based 3D CNNs or using 2D distance / contact maps to reflect the presence of structural motifs, enabling annotation of remote homologs and aiding in solving the multifunctional activities of enzymes, which potentially have domain-, or pocket-specific activities.

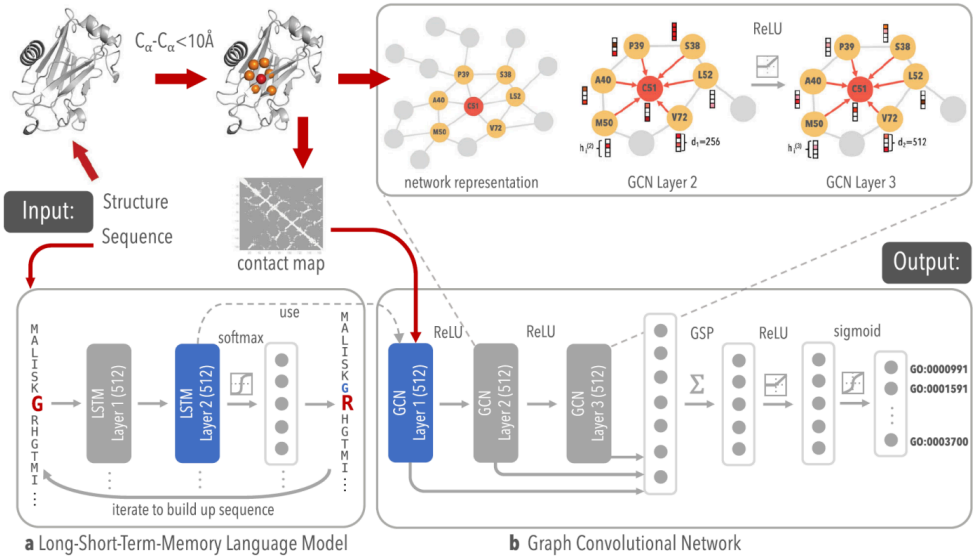

Figure 3. DeepFRI integrates structure-derived residue graphs (contact maps) with protein language-model sequence embeddings to predict protein functions (e.g., GO terms) at scale [10]

3.3. Multimodal fusion for function prediction

One of the new trends is multimodal learning where sequencing, structure and other biological context is incorporated with the purpose of understanding better how to predict enzyme functions. The various modalities offer orthogonal information on biochemical functions: sequence encodes evolutionary conservation and motifs; structure encodes pocket geometry and physicochemical environments; and contextual data (e.g., substrates/products, pathway context, or co-expression) can give orthogonal evidence on biochemical functions.

In the original manuscript, the example CLEAN-Contact (to be reported in 2024) is described as the combination of sequence and structure by the use of contrastive learning to predict EC numbers. The representation of a protein language model (e.g., ESM -2) is the result of a pretrained model, and a convolutional network (e.g., ResNet50) is used to retrieve features based on the contact maps of AlphaFold -predicted structures. The embeddings of enzymes with an EC label are then drawn together and those with dissimilar EC labels are driven apart by contrastive learning. The original manuscript states that the incorporation of the contact -map modality provided a significant boost in performance compared to sequence only CLEAN.

Chemical information can also be used as multimodal integration. There are methods which employ dual encoders on both enzymes and small molecules to assess the plausibility of an enzyme reaction pairing. In 2023, a study by the journal of Science presented a model called CLEAN (Contrastive Learning–Enabled enzyme Annotation) in which contrastive learning was applied to give functions to orphan enzymes and emphasized the importance of adding information that is related to the enzyme-catalyzing compounds.

In future, with the increased size of data resources, multimodal models can combine regulatory cues, localisation, phylogeny and network context, and can further enhance interpretability by revealing which pockets or motifs carry a predicted function. In general, multimodal fusion is set to

DOI: 10.54254/2753-8818/2026.32660

create further accuracy and utility of enzyme functioning prediction through integration of mutually supportive biological data.

4. Applications of AI-driven enzyme structure and function prediction

4.1. Applications in enzyme engineering

Enzyme engineering is directed to better the industrial and biomedical applications of natural biocatalysts or the design of novel biocatalysts. In addition to classical directed evolution and mechanism-directed rational design, AI-facilitated structure and function prediction can focus on mutation locations and minimize search space for experiments by correlating sequence mutation with stability, active-site geometry, and catalytic determinants. To enhance stability and activity, targeted stabilization and catalytic-site organization, AI-predicted structures enable selective screening of auxiliary residues prone to structuring folding, thermostability, or catalytic-site organization, and this has supported more effective mutational scanning and design. In the optimization of a plastic-degrading enzyme, machine-learning-aided optimization of PETase led to the construction of a variant of the enzyme, FAST-PETase, with five mutations, which is reported to be highly active than the wild-type across 3050 o C and a wide pH settlement and is capable of completely depolymerizing various post-consumer PET waste in relatively mild conditions in less than one week [13]. Substrate-scope redesign may also require the use of AI: suggested structures would allow in silico testing of pocket variations (e.g. docking-guided "virtual mutagenesis) to determine which mutation would be predicted to enhance binding or turnover in different substrates. Meanwhile, generative models have been developed in parallel to de novo design, where protein language models like ProGen (trained on scale (2.8108 sequences), have been shown able to generate enzyme-like sequences, which have been experimentally validated as able to fold into stable forms, and can retain a measurable activity outside natural sequence spaces. In general, AI facilitates a continuum in between optimizing aspects of concrete objectives and generating novel functional sequence space, and is not independent of the linear experimental validation.

4.2. Applications in synthetic biology

Synthetic biology is the redesign of biological systems to create new functions and products, where enzymes are essential modules to build stepwise metabolic pathways. Enzyme prediction with AI may be used to assist in pathway design, enzyme selection, and pathway optimization. Initially, AI allows de novo pathway discovery through retrobiosynthesis by adding reaction rules to enzyme/reaction databases to suggest multistep candidate routes given a target molecule, and allocating hypothetical enzyme classes (or EC-level hypotheses) to every step (Fig. 4) [14].

DOI: 10.54254/2753-8818/2026.32660

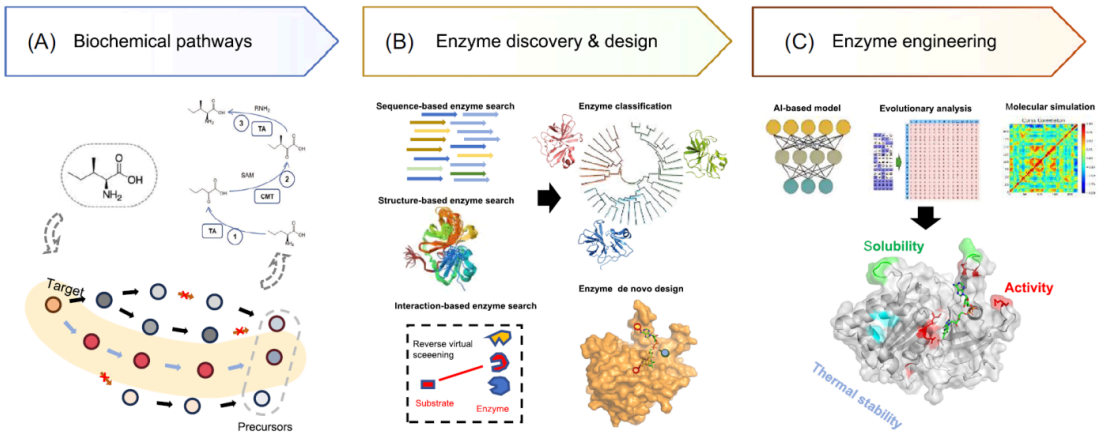

Figure 4. AI-enabled enzyme prediction accelerates pathway design, enzyme selection, and pathway optimization in synthetic biology [14]

Second, AI speeds up the process of determining enzymes of particular reactions. Functions predictors based on sequences and structure are able to access non-close homologs in massive sequence databases, whereas predicted folds permit active site and pocket-level comparisons to enhance reaction-to-enzyme matching. The paper also projects that the next-generation interaction modeling (also known as AlphaFold3) will have the potential to support the next-level prediction of enzyme-small-molecule interactions, and thus refine reverse screening processes that can begin with a target substrate or reaction, and screen interacting catalysts. The two AI-enabled approaches (repurposing permissible natural enzymes and then directed evolution) are highlighted in cases of orphan or non-natural reactions, whereas de novo designs based on generative frameworks or pocket-first frameworks, constructing scaffolds around transition-state ideas or ligand ideas, are stressed. Lastly, the AI has the potential to help with pathway optimization, e.g. detection of bottlenecks, selection of variant enzymes with better stability or kinetics at process conditions, leading to faster designBUILDTest cycle to sustainable biosynthesis.

4.3. Applications in drug discovery and development

Enzymes guide medicine, both as targets of drugs (e.g., kinases, proteases) and as therapeutic agents (e.g. enzyme replacement therapy) and the use of AI-assisted structure/function prediction is increasingly becoming a central focus of pharmaceutical research. To address structural bottlenecks caused by challenging targets (e.g., membrane, viral, or unstable enzymes) First, AlphaFold-class systems could enable usable 3D models of these structures to be used in structure-based design and virtual screening to support large-scale docking to prioritize candidate binders and possibly discover novel inhibitor chemotypes of resistance-associated enzymes. Second, AI-aided prediction of functions can be used to study drug metabolism and drug safety by estimating metabolic enzymes (e.g., cytochrome P450s) that could interact with or react on a drug and indicating metabolites that would decrease activity or introduce toxicity that should be minimized in medicinal chemistry. Third, in the case of enzyme therapeutics, structural modeling can be used to engineer protein stability, pharmacokinetics, tissue distribution, e.g., by compartmentalizing proteins as protease-sensitive polymerizations, controlling surface characteristics, and choosing conjugation sites of novel modalities, e.g., antibody-enzyme conjugate, or enzyme-prodrug. Lastly, progress in structure-prediction has also stimulated new paradigms of discovery, including the work of Isomorphic Labs

DOI: 10.54254/2753-8818/2026.32660

in the industry, and combining structure-prediction technology with molecular dynamics and generative models of bioactive molecule design. However, uncertainty in both physiological-relevant protein-ligand interaction processes and the complexity of cellular settings and model of toxicity still are key challenges and it highlights closer ties with experimental data.

5. Conclusions and outlook

Artificial intelligence is transforming the field of enzymology so that the field that has always been associated with results dominantly ascribed to experiment and experience, is now based on workflows guided by deep models of efficient structure and function prediction. On a structural level, AI, in large part, has enabled the scale-to-acquire single-chain protein models and made structural hypotheses about millions of enzymes, as well as helped predict functions, on a large scale, thus promoting the discovery of dark enzymes whose functions are unfamiliar, through AI-based annotation improving auto-notation and accuracy. One can predict that the great opportunities are accompanied by significant constraints. In structure predictions, a shift of the frontier is not away to protein monomers, but toward more complex structures, such as multimeric assemblies, enzyme–substrate/cofactor complexes, and larger functional machineries. Despite such advances as AlphaFold-Multimer and new direction of interaction-oriented models (now called AlphaFold3 in the original article), interfaces and induced fit, as well as multiple conformational states, are still hard to model accurately, which prompts more effective training data and blended training methods that incorporates physical constraints. Dynamic is closely related to this priority: a significant number of enzymatic processes rely on conformational changes and temporary catalytic enzyme conformations, and an increased connection with molecular dynamics, or other dynamic information, can enhance mechanistic interpretability. Integration of multi-source biological context is one important trend that is important in predicting functions. On top of sequence, structure, in addition to regulation, expression programs, subcellular localization, and metabolic-network position, enzyme function is to be regulated by genomics, transcriptomics, metabolomics and curated reaction knowledge to enable systems to move away single-enzyme labels and towards pathway- and system-level inferences. Generative AI also opens up design space, and it has been shown that novel enzyme-like sequences might be generated with desired properties, which could allow the creation of custom biocatalysts that degrade pollutants or generate patient-specific therapeutic enzymes. However, experimental validation cannot be ignored and in future directions, research must focus on the repetitive loops of prediction-validation-refinement in order to enhance reliability and external validity. Lastly, with the increased prevalence of AI-enabled design, intellectual property and biosecurity issues will have to be dealt with proactively. Altogether, AI-assisted predictions in structure and functions of enzymes offer novel opportunities in the field of basic science and biotechnology and further interdisciplinary progress is the key to unravel the entire universe of enzymes and convert the knowledge into medical, industrial, and environmental applications.

References

[1] Bateman A, Martin M-J, et al. UniProt: the universal protein knowledgebase in 2021. Nucleic Acids Research 2020.
[2] Jumper J, Evans R, Pritzel A, et al. Highly accurate protein structure prediction with AlphaFold. Nature 2021.
[3] Kong L, Ju F, Zhang H, Sun S, Bu D. FALCON2: a web server for high-quality prediction of protein tertiary structures. BMC Bioinformatics 2021.
[4] Meng Y, Zhang Z, Zhou C, et al. Protein structure prediction via deep learning: an in-depth review. Frontiers in Pharmacology 2025.

DOI: 10.54254/2753-8818/2026.32660

[5] Ju F, Zhu J, Shao B, et al. CopulaNet: Learning residue co-evolution directly from multiple sequence alignment for protein structure prediction. Nature Communications 2021.
[6] Agarwal V, McShan AC. The power and pitfalls of AlphaFold2 for structure prediction beyond rigid globular proteins. Nature Chemical Biology 2024.
[7] Chakravarty D, Schafer JW, Chen EA, et al. AlphaFold predictions of fold-switched conformations are driven by structure memorization. Nature Communications 2024.
[8] Boadu F, Cao H, Cheng J. Combining protein sequences and structures with transformers and equivariant graph neural networks to predict protein function. bioRxiv - Bioinformatics 2023.
[9] Yu T, Cui H, Li JC, Luo Y, Jiang G, Zhao H. Enzyme function prediction using contrastive learning. Science 2023.
[10] Gligorijević V, Renfrew PD, Kosciolek T, et al. Structure-based protein function prediction using graph convolutional networks. Nature Communications 2021.
[11] Yang Y, Jerger A, Feng S, et al. Improved enzyme functional annotation prediction using contrastive learning with structural inference. Communications Biology 2024.
[12] Lin Z, Akin H, Rao R, et al. Evolutionary-scale prediction of atomic-level protein structure with a language model. Science 2023.
[13] Lu H, Diaz DJ, Czarnecki NJ, et al. Machine learning-aided engineering of hydrolases for PET depolymerization. Nature 2022.
[14] Chen A, Peng X, Shen T, Zheng L, Wu D, Wang S. Discovery, design, and engineering of enzymes based on molecular retrobiosynthesis. mLife 2025.