Proceedings of the 4th International Conference on Mathematical Physics and Computational Simulation
DOI: 10.54254/2753-8818/2026.33395

The Analysis of Solar-Powered Wireless Charging Technology and Its Optimization

Wanyue Yuan

School of Electrical and Information Engineering, Tianjin University, Tianjin, China
ywy_0312@tju.edu.cn

Abstract. Wireless charging, as a new charging method, shows its unique advantages such as no need to plug or unplug connectors, safety and convenience to the world. However, the technology still has some defects in its working efficiency and stability. Some researchers cast their eyes on solar power generation which is more environmentally friendly. They try to combine wireless charging with solar power generation in order to compensate for the shortcomings of both technologies. Based on the theory of wireless charging and solar power generation, this article is going to discuss the feasibility of solar-powered wireless charging technology and analyze reasonable optimization methods for this technology. Through examples, this article draws the following conclusions. First, the efficiency of solar-powered wireless charging technology can be improved by adjusting the circuit structure and coordinating with appropriate algorithms. Then, the material of the coil and the type of power supply can be flexibly matched according to the needs, supplemented by necessary compensation parts, which can greatly reduce the cost of the system. Last, adding functional components is able to enlarge usage scenarios of the technology. Furthermore, homes are great application scenarios for solar-powered wireless charging technology.

Keywords: solar-powered wireless charging technology, wireless charging, solar power generation, optimization

1. Introduction

Recently, wireless charging has gradually entered the public view and has begun to be applied in many fields. Compared with wired charging mode, wireless charging eliminates the need to plug and unplug the charging connector, thus making device charging more convenient and safe. However, the charging efficiency of wireless charging is lower than that of wired charging [1, 2]. Hence, in the same situation, the energy consumption of wireless charging is higher than that of wired charging.

As a sort of easily accessible and renewable resource, solar energy is widely used in various fields by mankind through the photoelectric effect. The combination of solar energy and wireless charging technology supported by electromagnetic induction can greatly solve the energy consumption problem of wireless charging, and it promotes the development of low-carbon technology and relevant high-technological products. However, the existing researchers have different research levels and research scenarios in the field of solar-powered wireless charging, which is not conducive to new researchers' understanding of this field. For example, the article

© 2026 The Authors. This is an open access article distributed under the terms of the Creative Commons Attribution License 4.0 (https://creativecommons.org/licenses/by/4.0/).

DOI: 10.54254/2753-8818/2026.33395

Design, analysis and development of cost effective wireless charging for solar powered Electric Vehicle-A future perspective mentioned the application of lead-acid batteries in solar-powered wireless charging technology, but did not clearly define the efficiency requirement standard for recommending the use of such batteries [3]. In addition, in the article Research on wireless charging system of parking space based on optical storage, charge and discharge integration, authors designed a module to make the solar-powered wireless charging road possible, but they did not take into account the risk of light pollution on the road to traffic [4]. Based on this, this paper will introduce the principle of wireless charging and solar power generation, and analyze the advantages and disadvantages of the combination of the two technologies. In addition, this paper will also discuss the optimization of the existing solar wireless charging technology in terms of efficiency, cost and usage scenarios, so that later researchers can easily and quickly understand the relevant conclusions.

2. Principle analysis of solar-powered wireless charging technology

2.1. Wireless charging principle

At present, the most common wireless charging technology is based on the principle of electromagnetic induction to realize wireless energy transmission [5]. In the electromagnetic induction, when the main and secondary coils are placed in front of each other, the current can be received in the secondary coil by applying AC with a certain frequency and a specific peak value to the main coil (Figure 1). The current mainstream wireless charging technology uses this principle. The main coil and the secondary coil are respectively placed in the charger and the electrical equipment, and the current in the secondary coil can meet the needs of the electrical appliances by adjusting various parameters of the current in the main coil, so as to achieve the purpose of wireless charging.

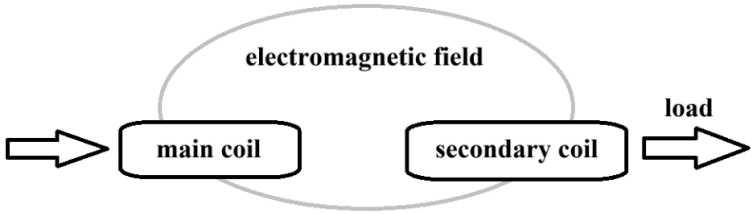

Figure 1. Schematic diagram of electromagnetic induction (picture credit: original)

On the basis of electromagnetic induction, some wireless charging technologies add magnetic resonance to realize better transmission. In 2006, a research team led by Marin Soljacic, a professor of physics at MIT, proposed a magnetic resonance wireless charging technology. Through a series of experiments, the team used magnetic resonance wireless charging technology to make a light bulb 2 meters away work successfully [6]. Compared with the electromagnetic induction type, the magnetic resonance type adjusts the resonant frequency of the main coil and the auxiliary coil to be strictly the same, which ensures wireless charging within a certain distance even if the two coils are not placed in a completely standard way. This type of wireless charging method can achieve longer transmission distance and higher flexibility than electromagnetic induction type. However, in practical applications, the optimization of magnetic resonance wireless charging system is more difficult due to its uncertain parameters [7].

In addition, there is a wireless charging method realized by radio waves. The composition of this type is mainly divided into transmitter and receiver. The transmitter is loaded with microwave

DOI: 10.54254/2753-8818/2026.33395

source and transmitter antenna while the receiver includes receiver antenna and rectifier circuit. During operation, the high-frequency AC generated from the microwave source forms an electromagnetic wave outward through the transmitting antenna. When the electromagnetic wave is close to the receiving end, it is cut by the receiving antenna, thus generating the corresponding voltage on the surface of the conductor at the receiving end to realize power supply. However, this wireless charging method still has efficiency and safety problems, and it is mostly used in aerospace and other special fields at present [6, 8].

The principles and characteristics of the three wireless charging types are not exactly the same, so their advantages and disadvantages are also different. Table 1 briefly lists the advantages and disadvantages of the three types.

Table 1. Comparison of advantages and disadvantages of three wireless charging types

Wireless charging method	Advantage	Disadvantage
Electromagnetic induction type	High efficiency, simple and cheap	Distance limited, alignment required
Magnetic resonance type	Long transmission distance, flexible	Many uncertain parameters
Radio wave type	The farthest transmission distance, free space	Lower efficiency, safety problems

2.2. Principles of solar power generation

The key of solar power generation technology lies in the PN junction structure. When enough sunlight shines on the upper n-type semiconductor, it will cause photoelectric effect and generate electrons on the surface of the semiconductor. These electrons and holes in the lower p-type semiconductor region attract each other, making the upper region lose electrons to obtain positive charge and the lower region obtain electrons to obtain negative charge. Therefore, a voltage difference is formed between the upper and lower layers(Figure 2). Through reasonable designing, it can be used for power generation.

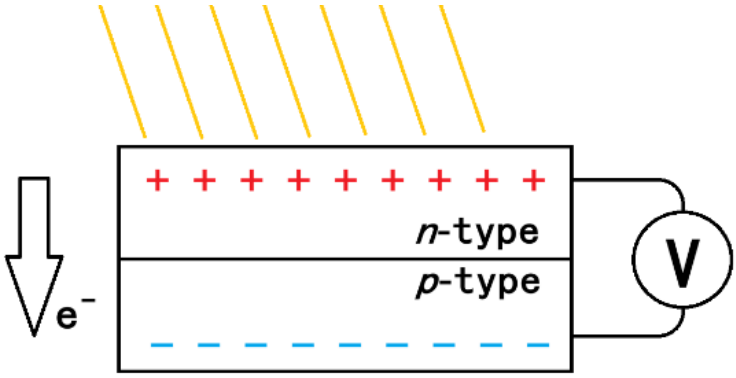

Figure 2. Principle of solar power generation (picture credit: original)

Solar energy still has great potential in power generation because of its cleaning, sustainability and wide sources. However, there are still problems to be solved in this technology. The cost of solar power generation equipment is relatively high, and the construction of solar power stations requires not only a large amount of cost, but also corresponding land resources, so the flexibility of solar power equipment is low. In addition, the instability of solar energy greatly improves the

DOI: 10.54254/2753-8818/2026.33395

requirements for energy storage [9]. At the same time, in some areas, weather changes and other factors also greatly limit the use of solar power generation [10].

2.3. Advantages and disadvantages of solar-powered wireless charging technology

Considering the advantages and disadvantages of the above wireless charging and solar power generation , solar-powered wireless charging technology came into being. It retains the advantages of both wireless charging and solar power generation. The addition of wireless charging technology overcomes the problem of poor flexibility of solar power generation equipment. Meanwhile, with the support of solar energy, the consumption of fossil energy by wireless charging technology has been greatly reduced, which promoted the implementation of low-carbon mode. Furthermore, solar-powered wireless charging technology depends less on traditional large-scale power network, making the independence of power station be improved [11]. Wireless charging reduces the number of wires distributed on the surface of power generation equipment, reduces the risk of aging of traditional equipment lines, and enhances the safety and reliability of the entire power system [12].

However, although the solar-powered wireless charging technology actually solves some problems by using the advantages of the two technologies, it also retains some drawbacks. The restrictions of weather, season and other factors on power generation from solar power generation still exist, and the problems of low charging efficiency have not been addressed. In addition, the application of solar-powered wireless charging technology in some urban infrastructure also has a certain demand for networked assistance [13].

3. Optimization of solar-powered wireless charging

3.1. Optimization of solar-powered wireless charging efficiency

For a charging technology, whether it can maintain high efficiency is the key factor to determine if it can be effectively applied. According to the analysis of the characteristics of solar-powered wireless charging, the first consideration for the optimization of its efficiency is the optimization of the circuit. By adding appropriate device combinations to the circuit, a good optimization effect can be achieved. For example, in the article Enhanced PV-based wireless EV charging with high gain Z-source converter and intelligent optimized MPPT control, the high gain Z-source converter topology it proposed is used to form the impedance network(Figure 3), which can achieve higher voltage gain than the traditional converter [14]. In the article Single-stage solar PV wireless charging system for electric vehicles ultra-wide voltage applications, the photovoltaic source and the transmitting coil are integrated, with LC anti resonance compensation set on the transmitting side, and these designs are combined into a single-stage topology [15]. In this way, it can eliminate the DC-DC converter on the receiving side and simplify the system [15].

DOI: 10.54254/2753-8818/2026.33395

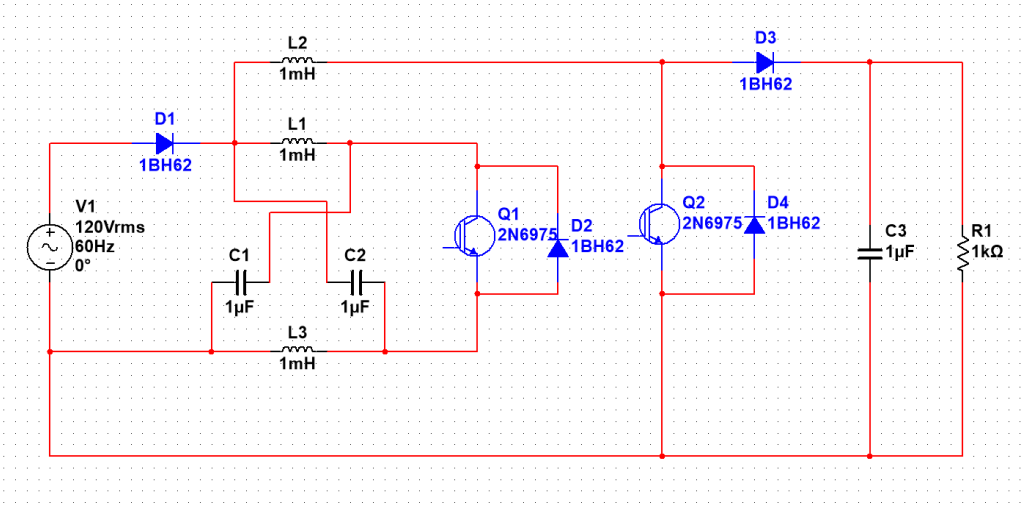

Figure 3. The high gain Z-source converter (picture credit: original)

With the application scenarios becoming increasingly complex, the algorithm used in the system plays a more and more critical role in circuit optimization. These leads to the emergence of many improved algorithms and optimized circuits. Here are two examples of algorithms. An algorithm imitates the foraging and climbing behavior of red pandas as well as optimizing the MPPT process in combination with the fuzzy logic system. It shows higher performance in the experiment with the improved Z-source converter topology mentioned above. Compared with the tracking efficiency of PSO, Gao and WCA algorithms which are not more than 98%, the experimental efficiency of the proposed fuzzy-based RPO MPPT for PV proposed in this study reaches 98.55%, which makes the whole system run more efficiently, adaptively and stably [14]. A CSA-QNN algorithm based on the combination of circle search algorithms and quantum neural net work can improve the efficiency of wireless charging and optimize the work of photovoltaic panels and power regulation units by optimizing charging parameters [16]. Apart from this, the addition of algorithm optimization can greatly promote the solar-powered wireless charging facilities to meet the management needs of urban networks.

From the above examples and analysis, it can be seen that by adjusting the circuit structure, adding appropriate components or combinations, and designing or improving appropriate algorithms for the system according to requirements, some excess losses in efficiency can be removed and the performance of the system can be improved.

3.2. Optimization of solar-powered wireless charging materials and cost

Material and cost are the two decisive factors for the promotion of solar-powered wireless charging as an application technology in various industries, not just in the laboratory. For the charging part, the optimization of materials mainly depends on the selection of coil materials, which also affects the cost of applications of the technology. For example, the use of low-carbon materials with high conductivity is conducive to reducing the loss of resistance in the process of energy transmission. This not only improves the reliability of charging, promoting the low-carbon mode, but also indirectly reduces the cost of cooling and other aspects [17]. Meanwhile, in some specific applications, ferrite materials can be abandoned to save related costs and make the system more compact. When necessary, SS compensation topology can be combined to reduce the complexity of

DOI: 10.54254/2753-8818/2026.33395

the circuit. Even though the expensive Litz wire has to be used sometimes to ensure high efficiency, the whole system still achieves the cost advantage compared with similar projects [18].

In addition, for some small daily solar-powered wireless charging equipment which require personnel operation, the selection of power supply can be flexibly changed according to the demand. For example, solar-powered wireless charging electric vehicles have high requirements on the safety and reliability of the system, and they need to fit the economic level of ordinary people. So they can be equipped with lead-acid batteries that are safer, more durable and have lower cost than lithium batteries [3].

Obviously, for solar-powered wireless charging technology, the optimization of materials and costs are complementary. The top materials recognized by researchers may not be the most suitable for different system applications and needs. In particular, the core parts such as coils and power supplies can be more flexibly applied with corresponding materials. If necessary, appropriate compensation parts can be added into the system. This way, it can save materials, reduce costs, and meet the needs of different people.

3.3. Optimization of solar-powered wireless charging usage scenarios

At present, the actual application scenarios of solar-powered wireless charging technology are still relatively limited, and most of them focus on daily electronic devices such as mobile phones and power banks. There has been hardly any commercial promotion for the application of vehicles. It is a common optimization method to purposely add components with special functions in solar-powered wireless charging facilities, including components with the functions of improving energy reception and optimizing the surrounding conditions of facilities. For example, aiming at the problem that the surface of solar-powered wireless charging road is prone to excessive heating, a special filter module is proposed to cooperate with photovoltaic cells to reduce the light energy intensity received by the solar road and make the sunlight received by the road more uniform [4]. To ensure that the car can enter the charging state smoothly, a parking space charging detection device can be added to the solar-powered wireless charging parking space. The device is equipped with a charging car with a charging coil alignment device and a bottom motor driving the charging coil. The charging position is corrected by Lora wireless communication acquisition management system and infrared sensor (Figure 4), so as to optimize the charging environment and improve charging efficiency [19]. In other aspects, solar-powered wireless charging can also be used to support household electricity. In the home environment with many small power appliances, solar-powered wireless charging undoubtedly has a good application prospect. For example, this technology can be used to maintain the operation of some household appliances under special scenarios (such as power failure), acting as a backup resource [20]. In addition, solar-powered wireless charging can also be used in the design of smart home. For example, the wireless charging table with solar cells not only makes the charging of electronic products more convenient, but also makes full use of clean energy, realizing low-carbon mode and environmental protection [21].

DOI: 10.54254/2753-8818/2026.33395

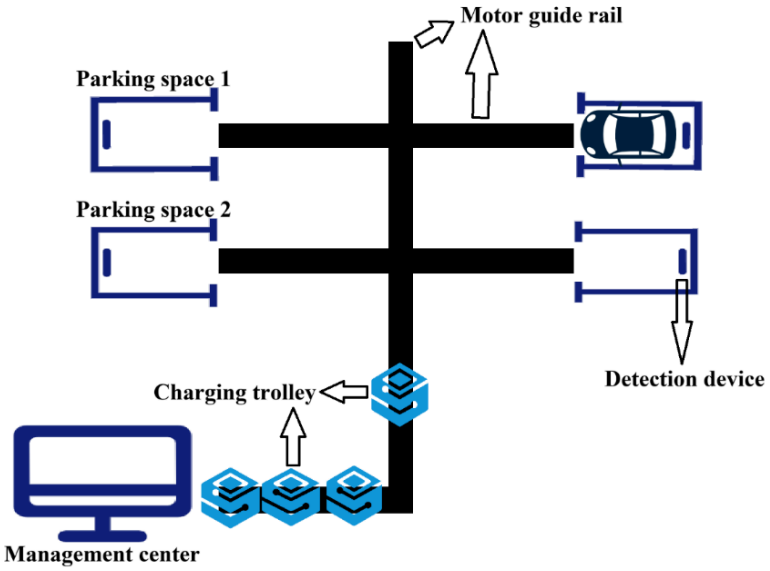

Figure 4. Structural diagram of alignment system (picture credit: original)

However, the current theoretical and practical solar-powered wireless charging scenarios have their own defects. Due to the limitations of weather and climate factors on solar-powered power generation, solar wireless charging has always been unable to replace the traditional power supply. Moreover, whether it is solar-powered wireless charging parking spaces and roads, or household backup resources, the solar panels in them will inevitably produce light pollution around, and these light pollution may even cause serious traffic accidents on the road. So in order to promote solar wireless charging technology in these fields, it is necessary to take measures to reduce the risk of light pollution.

To sum up, the application scenario of solar wireless charging technology can be greatly expanded with components with different functional properties. With the promotion of smart home lifestyle, if this technology can be further improved, the home environment will be an important aspect for its application.

4. Conclusion

The combination of wireless charging and solar power generation not only enhances the flexibility of the system, but also greatly promotes the application of low-carbon mode. Some problems still exist in this technology can also be alleviated by optimization. In terms of efficiency, not only can adjusting the circuit structure and adding appropriate devices reduce some energy loss, but also matching appropriate algorithms for the system can improve its performance and efficiency. In order to reduce excess costs, researchers can start with materials and flexibly select the materials of coil, power supply and other components according to the needs, matching the corresponding compensation parts when necessary. In addition, matching components with different functions into devices can broaden the use of solar-powered wireless charging technology, and this technology will be an important part of the future smart home system.

References

[1] Li, X., Zhou, F.G., Zhang, S.C. and Yang, C.X. (2021) Discussion on the Development Trend of Solar Charging for Mobile Phones. Southern Agricultural Machinery, 52(3), 182-183.

DOI: 10.54254/2753-8818/2026.33395

[2] Yao, Q.M., Xu, X., Wang, Y. and Chen, X.F. (2021) Research on Performance Test of Wireless Charger for Consumer Electronics. China Standardization, (24), 272-277.
[3] Sunil, V., Pal, P., Nava Prakash, N., Devabalaji, K.R. and Deepak Saloney, D.K. (2023) Design, Analysis and Development of Cost Effective Wireless Charging for Solar Powered Electric Vehicle-A Future Perspective. Proceedings of the 2022 OPJU International Technology Conference on Emerging Technologies for Sustainable Development (OTCON), 1-6.
[4] Yin, Y.F. and Zhang, X.L. (2024) Research on Wireless Charging System of Parking Space Based on Optical Storage, Charge and Discharge Integration. Nei Ran Ji Yu Pei Jian / Internal Combustion Engine and Parts, (12), 99-101.
[5] Chongqing Association for Science and Technology. (2023, December 8). Wireless Charging: Say Goodbye to a Life with Cables! Science China.
[6] Hou, M.X., Jiao, X.Y. and Zhu, X.B. (2020) An Overview of Magnetic Resonance Wireless Charging Technology for New Energy Vehicles. Information Technology and Informatization, 46(1), 37-42.
[7] Luo, Y.T. (2018). Research on Efficiency Optimization Method and Key Technology of Magnetically Coupled Resonant Wireless Power Transfer System. National University of Defense Technology.
[8] López, O.L.A., Rosabal, O.M., Azarbahram, A., Khattak, A.B., Monemi, M. and Souza, R.D. (2024) High-Power and Safe RF Wireless Charging: Cautious Deployment and Operation. IEEE Wireless Communications, 31(6), 118-125. https: //doi.org/10.1109/MWC.017.2300462
[9] Lian, J.Q. (2025) Clean Energy Transition: Challenges and Opportunities for Solar Energy Development. Anhui Science and Technology News, 013.
[10] Dong, J., Wen, M.D., Cui, R.G., Zhang, Y.X., Xi, Y.T. and Song, W.T. (2026) Spatial Distribution and Potential Evaluation of Solar Energy Resources in China. Natural Resources Informatization, (1), 23-31.
[11] Yang, D., Jiang, L.L. and Wang, X.Y. (2024) Modeling of Wireless Charging Stations Based on Solar and Wind Power and Prediction of Electric Vehicle Charging Demand. Natural Science Journal of Harbin Normal University, 40(1), 81-88.
[12] Zhang, Z., Chen, H., Weng, W., Chen, Y., Wu, J. and He, X. (2025) Distributed Wireless Power Transfer Based on Secondary-Side-Direct-Series Topology for Integration with Building-Attached Photovoltaic System. Scientific Reports, 15, 16926.
[13] Hu, Y.W. (2016) Design of Solar-Powered Charging Distributed System Based on Wireless Nodes. University of Electronic Science and Technology of China.
[14] Saminathan, M., Rakesh, V., Suryaprakash, S., Infant Prabu, S. and Sonamanayakkar, E. (2025) Enhanced PV-Based Wireless EV Charging with High Gain Z-Source Converter and Intelligent Optimized MPPT Control. Proceedings of the 2025 8th International Conference on Circuit, Power & Computing Technologies (ICCPCT), 1569-1574.
[15] Gautam, S.K. and Das, M. (2025) Single-Stage Solar PV Wireless Charging System for Electric Vehicles Ultra-Wide Voltage Applications. 2025 IEEE Energy Conversion Congress & Exposition Asia (ECCE-Asia), Bengaluru, India, 1–6.
[16] Meenalochini, P., Priya, R.A., Pugalenthi, R. (2024) Energy Management of Grid Connected PV with Efficient Inverter Based Wireless Electric Vehicle Battery Charger: A Hybrid CSA-QNN Technique. Journal of Energy Storage, 80, 110255.
[17] Cai, W. (2024) Research on Wireless Charging Technology for Electric Vehicles. Auto Maintenance Technician, (4), 10-11.
[18] Erel, M.Z., Özdemir, M.A. and Aydemir, M.T. (2025) Solar Energy-Powered Wireless Charging System for Three-Wheeled E-Scooter Applications. Renewable Energy, 246.
[19] Fu, W.C. (2021) Research on Wireless Charging Efficiency of Electric Vehicle and Design of Charging Device. Liaoning University of Technology.
[20] Ghosh, A., Gamage, D., Ukil, A. and Hu, A.P. (2024) Emergency Power Supply Enabling Solar PV Integration with Battery Storage and Wireless Interface. Journal of the Royal Society of New Zealand, 55(4), 1028-1050.
[21] Wang, Y.W., Zhang, B. and Zhang, S. (2015) Application Research on Wireless Charging Based on Solar Energy Supply. Power Electronics Technology, 49(10), 23-24, 37.