Proceedings of the 4th International Conference on Mathematical Physics and Computational Simulation
DOI: 10.54254/2753-8818/2026.33892

A Simulation Study of a Magnetically Coupled Resonant Wireless Power Transfer System Based on a Series-Series Compensation Topology

Bihan Zheng

School of Electrical Engineering, Beijing Information Science and Technology University, Beijing, China
13611101789@139.com

Abstract. Magnetically Coupled Resonant Wireless Power Transmission （MCR-WPT）offers a promising solution for convenient charging of mobile devices. This paper focuses on the SS (series-series) compensation topology. A complete system model was constructed in Multisim. To enhance the realism of the simulation. The model includes the internal resistance of the power supply to simulate the actual load response. The influence of the coupling coefficient k on the system's power transfer performance was investigated. Simulation results show that the output voltage exhibits the coupling coefficient k increasing initially and then decreasing, reaching a maximum of 19.218 V at k = 0.2. When the system enters the over-coupled region (k = 0.6), the output gain drops significantly due to the effects of frequency splitting and increased reflected impedance. It is also found that the SS topology maintains excellent voltage gain characteristics at resonance. The optimal coupling operating range for this system is 0.15–0.25, which can serve as a reference for parameter optimization of practical wireless charging systems.

Keywords: Magnetic resonance, SS compensation topology, Multisim simulation, Coupling coefficient, Frequency division

1. Introduction

Wireless power transfer (WPT) is now common for charging mobile devices, electric vehicles, and implantable medical devices. These applications demand more from charging methods.Traditional wired charging falls short in convenience, safety, and better environmental compatibility. Magnetically coupled resonant wireless power transfer (MCR-WPT) offers several advantages over traditional wired charging, including moderate transfer distances, high power capability, and effective penetration through non-metallic barriers [1, 2].

But in practical applications, wireless power transfer systems still face challenges including efficiency fluctuations, frequency splitting, and parameters drift. One solution is to use appropriate compensation topologies. Compensation networks cancel the reactive power from coil leakage inductance, improving the power factor, and they also improve frequency response [3].

© 2026 The Authors. This is an open access article distributed under the terms of the Creative Commons Attribution License 4.0 (https://creativecommons.org/licenses/by/4.0/).

DOI: 10.54254/2753-8818/2026.33892

Common compensation topologies are series-series (SS), series-parallel, parallel-series, and parallel-parallel. The SS topology stands out for its simple structure, good symmetry, and load-independent resonant frequency. Most research on SS topology includes modeling and analysis, frequency characteristics, and misalignment tolerance [4].

This paper studies magnetically coupled resonant WPT with SS compensation. Through theoretical modeling, the output characteristics at resonance are analyzed to determine how the coupling coefficient affects power transfer, how the SS topology behaves under specific conditions, and where the optimal operating range. Then build a system model in Multisim based on key parameter design.

2. Theoretical basis of wireless power transfer systems

2.1. Physical mechanism of magnetic resonance

In MCR-WPT, two coils share the same resonant frequency, and near-field magnetic coupling enables wireless power transfer. When the primary and secondary coils operate at the same resonant frequency, the system resonates. At resonance, the inductive reactance from leakage inductance is cancelled by the capacitive reactance from the compensation capacitor. The circuit impedance becomes purely resistive, which allows efficient power transfer. At resonance, the primary and secondary sides form a strong energy transfer path. Even with a low coupling coefficient, the system transfers energy more efficiently than conventional inductive coupling. Zhou Jinmei's doctoral thesis studied hybrid magnetic-electromagnetic WPT. The thesis shows that compared to conventional inductive WPT, magnetically coupled resonant technology transfers power efficiently over medium distances and tolerates some coil misalignment [3].

2.2. Characteristics of the SS compensation topology

In magnetically coupled resonant WPT systems, compensation topology affects power transfer capacity, efficiency, and frequency characteristics. In SS compensation, both the primary and secondary sides use a series capacitor and inductor. The resonance condition is simple. C1 and C2 depend only on coil inductance and operating frequency. The resonanc condition is

$$\omega_0 = \frac{1}{\sqrt{L_1 C_1}} = \frac{1}{\sqrt{L_2 C_2}} \tag{1}$$

Result:

$$C_1 = C_2 = \frac{1}{(2\pi f)^2 L_1} \approx 70nF \tag{2}$$

These results match the design method from Lu Yuanfang et al. and provide the parameters for later simulation [5]. The SS topology has a loadindependent resonant frequency, so the two sides stay matched as the load varies. The resonance frequency doesn't change with coupling coefficient either, making fixedfrequency control possible. Primary and secondary sides are symmetric, which keeps modeling and control simple—good for parameter design and engineering. At resonance, the SS topology turns the inverter's highfrequency square wave into a sine wave. That cuts EMI and improves power transfer. These features make SS topology common in MCRWPT, especially for medium to shortrange charging with stable loads.

DOI: 10.54254/2753-8818/2026.33892

3. Design of system parameters and simulation modeling

3.1. Architecture of the simulation circuit

The simulation model is built in Multisim. It includes a DC power supply, a full-bridge inverter, an SS compensation network, and a rectified load. The DC input voltage is 24 V. The full-bridge inverter uses IRF540 MOSFETs. Two out-of-phase pulse sources (V2 and V3) convert the 24 V DC into an 85 kHz square wave, which drives the resonant circuit. A 1 Ω resistor R2 is added in series at the input to model the internal resistance of a real power supply. This makes the simulation more realistic and closer to actual circuit operation.

3.2. Parameter configuration of compensation network and magnetic coupling

In SS compensation, the compensation capacitors and coil parameters must be set correctly for stable resonance. The target operating frequency is 85 kHz. Considering transmission distance and coil size, the primary and secondary coils are both set to 50 μH. According to the SS resonance condition, the compensation capacitors C1 and C2 are calculated as 70 nF each. The load resistance RL is set to 10 Ω [6]. The coupling coefficient k affects the system's power transfer performance. In the simulation, adjusting k of the mutual inductor T1 models different transmission distances. This shows how k affects output voltage and efficiency. The simulation circuit is shown in Figure 1.

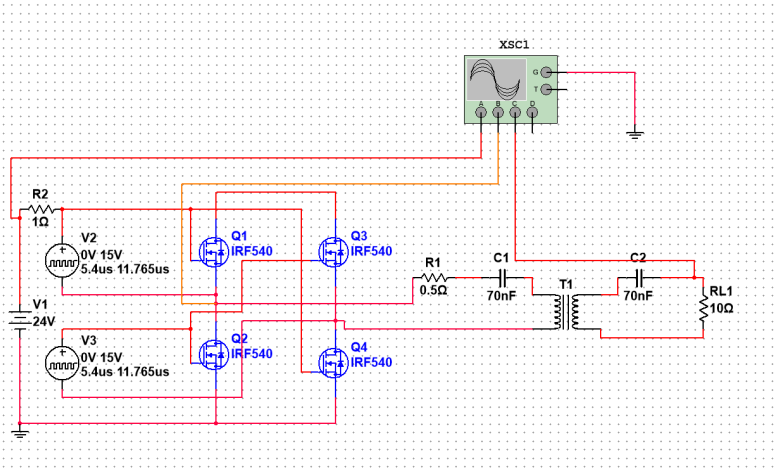

Figure 1. Multisim simulation circuit diagram(picture credit:original)

4. Analysis of simulation results and experimental data

4.1. Experimental validation of resonance waveforms

After the simulation started, the system stabilized in figure 2. The resonance waveforms from the oscilloscope agreed with theoretical predictions. This confirms that the system parameters are correct and the excellent performance of the SS compensation topology at resonance. The inverter output (Channel_B) is an 85 kHz square wave with an amplitude of about 24 V. This means the full-bridge inverter (IRF540 MOSFET) works at the preset switching frequency. The rising and falling edges are steep, which shows the MOSFET switch is fast and the inverter stage is working. With k = 0.2, the load output (Channel_C) is an 85 kHz sinusoidal voltage. The waveform is smooth and has low harmonics, exhibiting a good sinusoidal waveform. This confirms the excellent filtering

DOI: 10.54254/2753-8818/2026.33892

characteristics of the SS topology at the resonant frequency point. The resonance waveforms support later studies on how the coupling coefficient affects power transfer performance. They also confirm the theoretical analysis and parameter design.

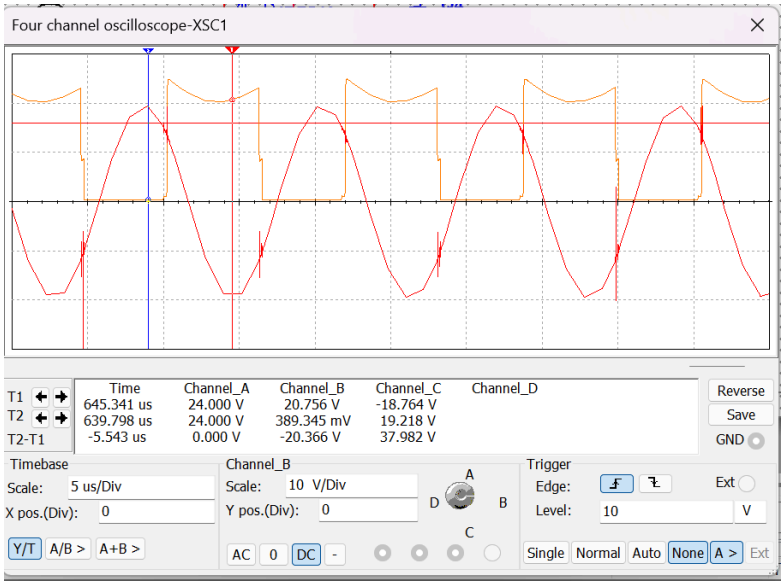

Figure 2. Output voltage waveform of the wireless power transfer system at k = 0.2(picture credit:original)

4.2. Effect of coupling coefficient k on power transfer characteristics

Adjusting k of T1 and recording the load voltage allows analysis of the relationship between power transfer efficiency and transmission distance in Figure 3:

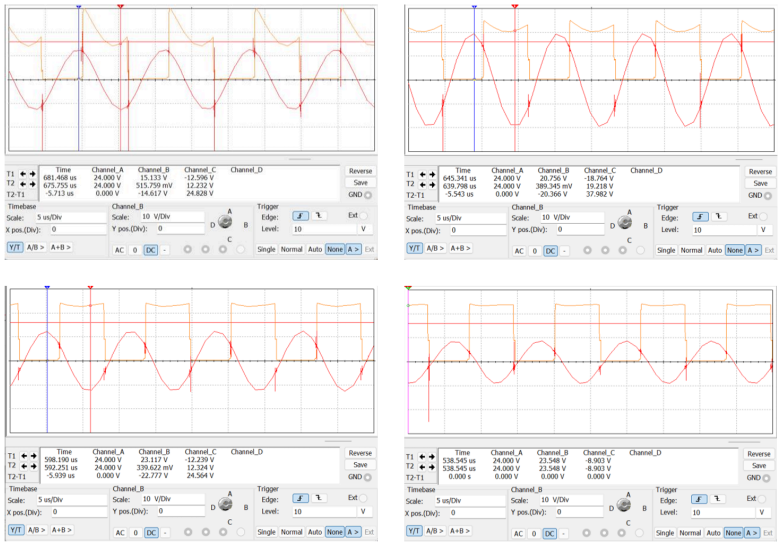

Figure 3. Output voltage versus coupling coefficient for a WPT system(picture credit: original)

At k = 0.05 (top left figure), the system is weakly coupled. The mutual inductance M is small, so the induced voltage on the secondary side is low. The top-left waveform shows a 'deep dip' at the peak of the yellow square wave. This happens because under weak coupling, the primary-side impedance is low. When the MOSFET turns on, the inrush current causes a sharp voltage drop

DOI: 10.54254/2753-8818/2026.33892

across the power supply's internal resistance R2. Long-distance power transfer requires more from the power supply. When k increases to 0.4 (lower left) and then to 0.6 (lower right), the system becomes over-coupled. The output voltage drops. As coupling rises, the reflected impedance increases. This limits the current in the primary coil and reduces power transfer. Frequency splitting also appears. Although the waveform remains sinusoidal, the system's driving frequency is fixed at 85 kHz, but in strong coupling the resonance peak splits into two peaks away from 85 kHz. This puts 85 kHz at the split trough, so the gain drops. At k = 0.6 (lower right), the output voltage falls to 8.903 V. This confirms the effect of frequency splitting [7]. In this simulation, the output voltage first rises then falls as k increases. But no double-peak frequency splitting appears in the over-coupled state. This is because the fixed drive frequency means that the system only exhibits a gain drop at specific frequencies. The power supply internal resistance R2 increases system damping, which broadens the resonance bandwidth and smooths the splitting peaks [8, 9].

5. Discussion

5.1. Data comparison and validation

Table 1. Simulated and experimental output voltage versus coupling coefficient

Coupling coefficient (k)	Peak output voltage (Vout_p)	Transmission status	Analysis of Technical Features
0.05	12.232 V	Weakly coupled	The mutual inductance is low, so the induced voltage is low.
0.20	19.218 V	Critical/Optimal coupling	Maximum energy transfer efficiency and optimal impedance matching.
0.40	12.324 V	over-coupling	Frequency splitting appears, and the increased reflected impedance suppresses the primary current.
0.60	8.903 V	Deeply over-coupled	Frequency splitting occurs, and the gain at 85 kHz drops.

Table 1 lists the simulated output voltage at different coupling coefficients. It shows how power transfer performance changes with coupling. At k = 0.05 (under-coupled), the mutual inductance is low. The induced voltage is low, and the output reaches 12.232 V. At k = 0.20, the system is at the optimal coupling point. Energy transfer is most efficient and impedance matches. The output voltage peaks at 19.218 V, corresponding to a voltage transfer ratio of 80% (19.218 V / 24 V). At resonance, the SS topology provides a stable voltage output. This shows the performance of the SS topology for medium- and short-range wireless charging. When k increases to 0.40 and 0.60, the system becomes over-coupled. Frequency splitting appears. The reflected impedance increases and suppresses the primary current. This causes the output voltage to drop to 12.324 V and 8.903 V, respectively. The gain at 85 kHz is reduced. Based on these data, the system achieves efficient and stable operation when k stays between 0.15 and 0.25.

The observed pattern—output voltage first rises then falls with coupling coefficient—matches the findings of Zhao Zhengming and others on magnetically coupled resonant WPT systems. This confirms that the SS topology has optimal power transfer efficiency near the critical coupling point [1]. Recent research analyzes how frequency splitting occurs and how it changes under strong coupling [9]. In contrast to Liu Yuanyuan et al., who studied frequency splitting in over-coupled regions, this simulation shows that the power supply's internal resistance dampens frequency splitting. This finding complements the existing understanding of how system damping affects

DOI: 10.54254/2753-8818/2026.33892

frequency splitting [7, 10]. The optimal coupling range identified in this paper (0.15–0.25) matches the range recommended by Lu Yuanfang et al. through coil parameter optimization. This confirms that the parameter selection for SS topologies in practical design is reproducible and provides a useful reference [5].

5.2. Effect of coupling coefficient on power transfer performance

This study used Multisim simulations to examine the SS compensation topology under different coupling levels. The output voltage does not increase linearly with k. It first rises, then falls. In the under-coupled region ($k < 0.2$), the output voltage rises quickly with k. At $k = 0.05$, the voltage is only 12.232 V, showing that long-distance transfer is limited by magnetic circuit reluctance. As k approaches 0.2, the system reaches its optimal region. The output voltage peaks at 19.218 V, confirming that C1 = C2 = 70 nF achieves optimal resonant matching at 85 kHz. At $k = 0.6$ (over-coupled), the voltage drops sharply to 8.903 V. This verifies frequency splitting: under strong coupling, the single resonance peak splits into two peaks away from the center frequency, causing a large gain drop at 85 kHz. Therefore, choosing an appropriate k is important for improving power transfer efficiency.

From an application perspective, the coupling coefficient behavior characterized here has direct relevance to coil layout and alignment in electric vehicle wireless charging. Vehicle-to-ground coil offset translates directly into coupling coefficient variation; departures from the optimal range degrade charging efficiency. Coil geometry and installation height should therefore be planned with this range in mind, and auxiliary positioning or adaptive control can maintain the coefficient within bounds during operation. The fixed-frequency SS topology also suits constrained applications such as implantable medical devices, where component count and cost are primary concerns.

Looking ahead, the key limitation of fixed-frequency control is its vulnerability to gain attenuation from frequency splitting under strong coupling. Multivariable control strategies for SS compensation have shown promise in sustaining system performance across wider coupling variations and closed-loop adaptive systems that dynamically adjust drive frequency or compensation parameters represent a natural extension [11]. The simulation platform developed here provides a foundation for hardware validation; constructing a physical prototype to calibrate the model against experimental measurements is the immediate next step.

6. Conclusion

This paper investigates the performance characteristics of the SS compensation topology in MCR-WPT systems through simulation. Experimental results show that the SS topology has a symmetric structure and a load-independent resonant frequency. At resonance, the system converts high-frequency square waves into sinusoidal output. Both weak and strong coupling reduce power transfer efficiency. Frequency splitting in the over-coupled region affects fixed-frequency systems. With L=50 uH, C=70 nF, the system achieves optimal efficiency and stability when the coupling coefficient is about 0.2.

For example, in an electric vehicle wireless charging scenario, including the power supply's internal resistance in the simulation model helps the research environment better replicate actual hardware conditions. Our simulation successfully captures the'deep dip'caused by inrush current under undercoupled conditions, and it clearly reveals how the internal resistance influences the system's dynamic response. Beyond that, these results can assist in parameter design for wireless charging systems and help define the appropriate operating range for fixedfrequency control. Taken

DOI: 10.54254/2753-8818/2026.33892

together, this work moves the analysis of the SS topology away from ideal assumptions and toward more realistic engineering contexts—where nonidealities of the power supply truly matter.

References

[1] Zhao, Z. M., Zhang, Y. M., & Chen, K. N. (2013). Recent advances in magnetic coupling resonant wireless power transfer technology. Chinese Journal of Electrical Engineering, 33(3), 1-13+21.
[2] He, X., Liu, S., & Wu, J. (2024). Wireless power and information dual transfer system via magnetically coupled resonators. Communications Engineering, 3(1), 8.
[3] Gao, J. L., & Zhang, Q. (2021). A study on the SS-type compensation topology for wireless charging systems in electric vehicles. Journal of Jiamusi University (Natural Science Edition), 39(1), 27-30.
[4] Zhou, J. M. (2022). A study on hybrid electromagnetic coupling wireless power transfer technology (Doctoral dissertation). Hangzhou Dianzi University.
[5] Lu, Y. F., Li, Y. Y., Yang, B., et al. (2022). A method for parameter optimisation design of an SS-type dynamic wireless power transfer system taking into account variations in coil parameters. Journal of Electrical Engineering, 37(18), 4537-4547.
[6] Kim, H., et al. (2020). Mitigation of frequency splitting phenomena using a matching capacitor in wireless power transfer system for automated guided vehicle. In 2020 IEEE Wireless Power Transfer Conference (WPTC)pp. 170-173
[7] Liu, Y. Y., & Feng, H. W. (2019). Analysis of transmission efficiency in the over-coupled region of a magnetically coupled resonant wireless power transfer system. Journal of Nanjing University of Science and Technology, 43(3), 300-305.
[8] Li, Y., Zhang, Y. X., Yang, Q. X., et al. (2016). Analysis and experimental validation of the maximum power efficiency point in a magnetically coupled resonant wireless power transfer system. Journal of Electrical Engineering, 31(2), 18-24.
[9] Liu, X., Yuan, X., Xia, C., & Wu, X. (2021). Analysis and utilization of the frequency splitting phenomenon in wireless power transfer systems. IEEE Transactions on Power Electronics, 36(4), 3840-3851.
[10] Xue, H., Liu, X. W., & Sun, Z. F. (2015). A study on the load characteristics of a wireless power transfer system based on magnetic coupling resonance. Industrial and Mining Automation, 41(3), 66-70.
[11] Dong, W., Madawala, U., & Baguley, C. (2022). Numerical optimal control strategy for series tuned IPT systems. In 2022 IEEE 7th Southern Power Electronics Conference (SPEC) (pp. 1-6).