Proceedings of the 4th International Conference on Mathematical Physics and Computational Simulation
DOI: 10.54254/2753-8818/2026.34264

Solar Wireless Charging of Electrical Equipment for New Energy Vehicles

Yu Wang

College of International Education, Changchun University of Technology, Changchun, China
wy3299@gmail.com

Abstract. This new energy car uses the solar power generation device as the main energy supply unit to obtain electric energy through photoelectric conversion and provide power for the whole vehicle. The design goal is to achieve smooth driving and precise control of the vehicle's trajectory. In the test, the wire connecting the power module and the new power detector was too short. Too many wires also interfered with the drive wheels. As a result, the power detector could not be installed on the solar car's roof, which prevented it from providing a stable power source. This resulted in abnormal power output and significantly impaired driving. The addition of the detection module increased the difficulty of vehicle assembly, making it impossible to complete normal driving and trajectory tracking tasks according to the preset plan. To re-examine and deepen the analysis of the above problems, this paper makes targeted adjustments and improvements to the relevant research ideas and contents, simplifies the internal wires of the solar car, supplies power to its device through the wireless charging mode, and designs the wireless charging circuit, so that the new energy car can automatically supply energy to its energy storage unit when it moves to the wireless charging device.

Keywords: solar energy, wireless charging, circuit design

1. Introduction

The process of global carbon neutralization has accelerated, and China's new energy vehicle industry has entered a stage of large-scale and high-quality development. The traditional centralized energy supplement mode of power grid is facing industry pain points such as high pressure on regional power grid load, limited energy supplement scenarios, and the anxiety of endurance has not been completely solved. Independent energy supplement on clean energy vehicles has become one of the core directions of new energy vehicle technology research and development, and the energy supply of vehicle internal devices through wireless charging mode can greatly alleviate the endurance problem [1].

The application status and technology iteration direction of solar photovoltaic technology, through the innovation of wireless charging seats for solar power generation, not only solves the contradiction that the electronic equipment of outdoor sports people cannot be charged, but also has little impact on green facilities [2-6]. At present, the vehicle-mounted photovoltaic technology has been implemented in a number of mass-produced vehicles, but it cannot be popularized on a large

© 2026 The Authors. This is an open access article distributed under the terms of the Creative Commons Attribution License 4.0 (https://creativecommons.org/licenses/by/4.0/).

DOI: 10.54254/2753-8818/2026.34264

scale. At this stage, it is mostly used for the power supply of on-board low-voltage appliances, while the direct charging technology for high-voltage power battery is still in the optimization iteration stage. Photoelectric conversion efficiency, adaptability to vehicle environments, and all-weather operation stability are the core aspects of current technological breakthroughs. The pain point of new energy vehicles is that they cannot continuously provide stable energy and sufficient horsepower for the vehicle, which may lead to a shortage of power supply during vehicle operation.On the contrary, only by providing the electricity generated by solar energy to the electrical equipment on the vehicle can the demand be met. Wireless charging can well solve the problem of a single energy supply [2].

The core technology of solar charging is that it can effectively reduce the vehicle's dependence on the grid's energy supplement, and further improve the vehicle's endurance redundancy. It is the key technology path for new energy vehicles to achieve zero carbon emissions, and also has significant environmental protection value and long-term economic value.Integrating the core technology of wireless charging, solar energy provides basic endurance, and wireless charging realizes uninterrupted energy supplement, so as to jointly realize all-weather continuous operation. The research of this paper is to complete the vehicle design, and combine the wireless charging module to power the car and the equipment in the vehicle. Solar energy is used to supply power to the electrical equipment in the vehicle through wireless charging [3].

2. Examples of different schemes

The impact of the wire module encountered in this article on the in-vehicle equipment has different solutions and many cases worth learning from. Through the conversion of solar energy, and using the method of ultrasonic distance measurement to analyze the position of the object to be charged, the subsequent wireless charging device moves to the lower part of the object to be charged by virtue of the slider, and the final moving position is very accurate, which well solves the problem of low charging efficiency caused by excessive lateral errors between the coil of the wireless charging module and the object to be charged [4]. Some scholars have designed a mobile phone wireless charger based on electromagnetic coupling technology, using 12V power adapter to replace the vehicle power supply. Finally, through the test, they found the suitable effective wireless charging distance, and also analyzed the charging efficiency for many times. The charging efficiency can reach 40%~50% of the standard, which is highly feasible [5]. At the same time, a wireless charging leisure seat based on solar power generation was designed, which takes the photovoltaic conversion of solar panels, battery energy storage, wireless charging system of electromagnetic coupling wireless charging technology as the core, and provides new ideas for the innovation and convenience of leisure and entertainment facilities in public areas. It is obvious that the wireless charging scheme given in this paper can also prove the feasibility of the scheme for the project based on wireless power supply [6].

3. Hardware equipment

3.1. Solar panel

MF 12 solar panel is selected as the energy acquisition unit in this experiment. As shown in Fig. 1, the solar panel has a rated power of 12W, a rated voltage of 6V, a normal working output voltage range of 5V~7V, and an overall dimension of 284 mm×190 mm. It has the characteristics of stable output characteristics, stable photoelectric conversion efficiency, strong environmental adaptability,

DOI: 10.54254/2753-8818/2026.34264

and good operation reliability. The solar panel is highly matched with the energy supply demand of the new energy car and the layout of the whole car in terms of voltage output, power level and structural size. It can effectively convert light energy into electric energy, provide stable power for the car, ensure the car runs smoothly and achieve accurate trajectory control [7].

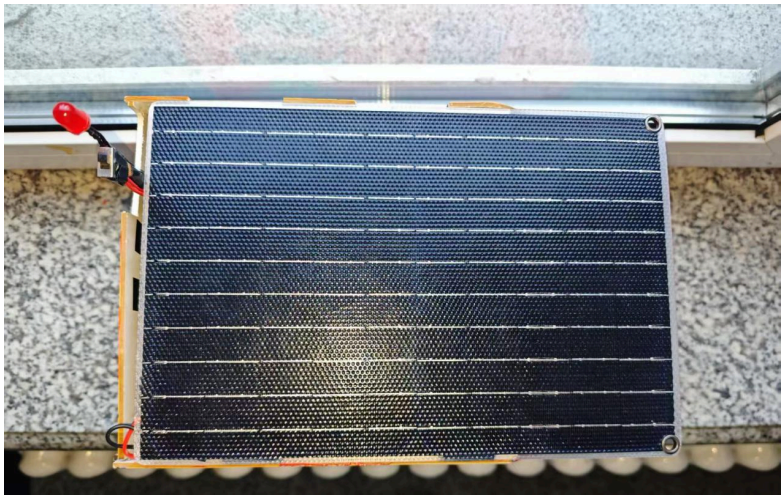

Figure 1. Solar panel (picture credit: original)

3.2. Physical display of the small car

3.2.1. Mechanical structure section



Figure 2. Vehicle body schematic diagram (picture credit:original)

First of all, the scheme design of the overall body structure is completed according to the indicators and operation requirements of most relevant models on the market. With the help of SolidWorks 3D modeling software, the car body model is drawn and assembled according to the established parameters, and then the vehicle body structure is processed and formed through 3D printing technology. The two rear wheels and transmission gears of the car are made of appropriately sized acrylic sheets to ensure transmission accuracy and structural strength. The specific structure is shown in Fig. 2. Considering the requirements for the realization of the car's steering function, the front steering wheel is controlled by the cam mechanism, so as to realize the precise adjustment of the steering action. The driving motor is equipped to provide power for the car and ensure the normal driving of the whole vehicle.

DOI: 10.54254/2753-8818/2026.34264

3.2.2. Design of the drive circuit

Through the in-depth study of the principle and system composition of solar charging, this design uses a single-chip solar panel as the photoelectric converter to replace the traditional solar power generation module, and uses a set of self-developed charge discharge PCB Based on cn3302 chip to replace the wireless charging scheme,as shown in Fig. 3. Three farad capacitors with rated voltage of 2.5V, capacity of 100F and overall dimension of 18mm×64mm are selected for the energy storage part to replace the on-board power unit. The driving power of the whole vehicle comes from the solar panel, which outputs electric energy through photoelectric conversion, and then stores energy and stabilizes the output of farad capacitor through the charge and discharge control module to provide stable power supply for each electric module of the car. In order to meet the requirements of the competition rules, the design completes the construction and debugging of the drive control circuit board on the perfboard. The core function of the circuit board is power supply voltage stabilization and multi module integration: on the one hand, the 7.5V output voltage of the super capacitor bank (farad capacitor) is stabilized to 5V through the step-down circuit to match the rated voltage demand of the driving motor and ensure the stable operation of the trolley; On the other hand, it integrates voice module, management module and main control module to realize the centralized control of system instructions, complete the voice broadcasting function specified for the event, and ensure the coordinated execution of management action and vehicle operation logic.

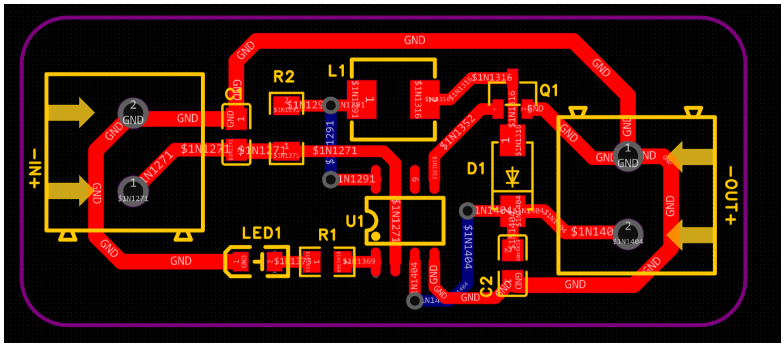

Figure 3. PCB (picture credit: original)

3.3. Solar-powered vehicle operation

In the initial debugging phase, the vehicle was directly powered by a supercapacitor, and its operation was stable. At this time, the positive and negative leads of the Farad capacitor were relatively short. Although the transmission mechanisms such as the main driven wheel and the auxiliary driven wheel of the vehicle did not have corresponding protective structures, it did not affect the normal movement of the vehicle. When the supercapacitor was depleted, it needed to be recharged through a charging circuit composed of a solar panel and a CN3302 chip. During the initial debugging phase, the vehicle was directly powered by a supercapacitor, and its operation was stable. At this time, the positive and negative leads of the supercapacitor were relatively short. However, as the number of functional modules increased, the remaining installation space inside the vehicle became limited, leading to an increase in the length of the power supply leads. This, in turn, interfered with the vehicle's transmission system, affecting its normal operation. Aiming at this problem in the debugging process, through analysis and summary, it can be seen that the fault is mainly caused by the long power supply lead. Therefore, this design replaces the original charging module with a wireless charging module, and the wireless charging coil can be arranged at the

DOI: 10.54254/2753-8818/2026.34264

bottom of the car body, which not only avoids the interference with the transmission system, but also makes the charging process more convenient and reliable.

4. Wireless charging module design

4.1. Wireless charging system architecture

Based on Texas Instruments (TI) bq500212a and bq51013b chips, the wireless charging system uses a "transmitter receiver" binary architecture to realize power transmission through magnetic coupling induction. The overall system architecture is shown in Fig. 4.

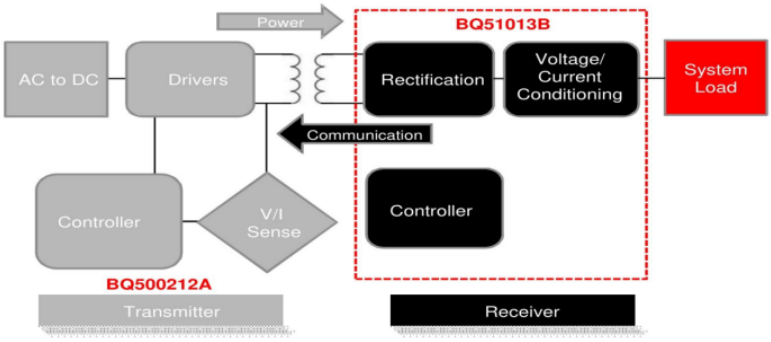

Figure 4. Wireless charging overall architecture diagram (picture credit: original)

4.2. Transmitter

The transmitting end is mainly composed of AC/DC conversion module, driving circuit, transmitting controller and voltage/current detection module. Its main function is to convert municipal or household AC power into stable DC power to supply power for the transmitting end, invert DC power into high-frequency AC power, drive the transmitting coil to generate alternating magnetic field, and adjust the output power according to the feedback of the receiving end. The detection module provides data for the transmission controller to complete the power adjustment to achieve the purpose of power transmission.

4.3. Receiver

The receiving end is composed of receiving coil, rectifier module, voltage and current regulation module, receiving end controller and system load with bq51013b chip as the core. The core function is to convert the magnetic energy at the transmitting end into stable electric energy to supply the system load.

4.4. Coil specifications

The receiving end is composed of receiving coil, rectifier module, voltage and current regulation module, receiving end controller and system load with bq51013b chip as the core. The core function is to convert the magnetic energy at the transmitting end into stable electric energy to supply the system load.

DOI: 10.54254/2753-8818/2026.34264

4.5. Receiver circuit design

Based on the understanding of wireless charging and the analysis of existing problems, the 15W single coil wireless charging receiver chip bq51013b is selected in this design, which uses Qi standard protocol, and the core parameters are highly compatible with the solar car energy supply system.The circuit schematic diagram of the chip is shown in Fig. 5. The input voltage of the chip covers 5V-10V, which is fully compatible with the 5V-7V output range of the solar panel. No additional voltage conversion circuit is required, which effectively simplifies the system structure; When the output voltage is 5V (± 0.5V), safe and efficient power supply can be achieved without additional charge and discharge management chip. Under typical conditions (input 6V, output 7.2V/1a), the chip conversion efficiency is ≥ 85%, and the total charging efficiency of the system can reach 78%-82% after matching with the high-efficiency coil assembly, which can meet the efficiency requirements of the car's endurance compensation; At the same time, the chip is packaged in 4.50mm*3.50mm 20 pin vqfn, which is small and compact, can adapt to the limited installation space of the car, and will not conflict with the layout of the transmission system and energy storage unit.

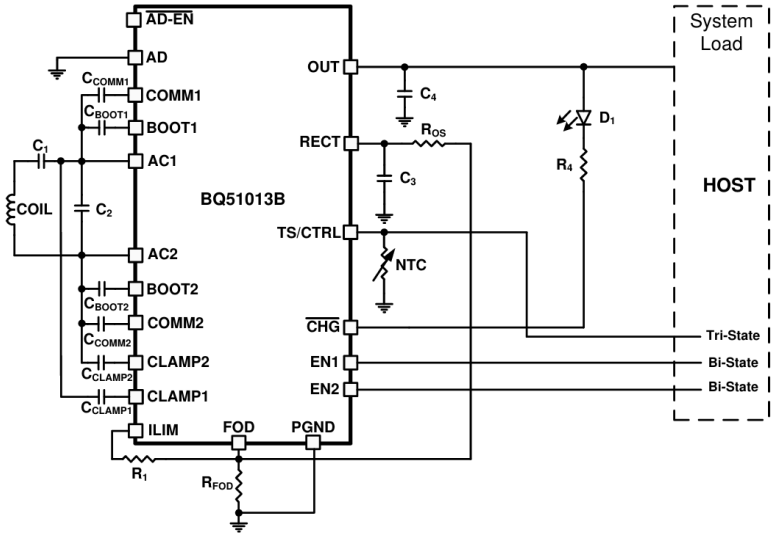

Figure 5. Receiver circuit schematic (picture credit: original)

It is expected that the charging efficiency of the optimized system will reach 75%-82%, and the voltage fluctuation will be ≤ ±0.1V, meeting the experimental requirements and effectively solving the defects of the initial scheme. The time dimension can break the boundary between day and night. Solar energy is dominant for energy storage in advance during the day, and wireless charging is used for continuous energy supply at night. The combination of the two can complete 24-hour continuous production, and ensure the commitment of continuous operation for social and public security activities such as emergency relief and security patrol. The spatial dimension can break through the limitations of the scene, adapt to more complex environments, expand the scope of activities and expand the coverage area. At the same time, the use of intelligent inspection robot is suitable for outdoor, field monitoring or areas where power resources are scarce to cover the ground layer of the area. For the air area, solar energy is used to monitor the UAV and other devices that need to move in real time to complete the air ground regionalization coverage. The wireless charging module of solar energy can provide automatic energy supply scheme in the air or on the ground. At the same

DOI: 10.54254/2753-8818/2026.34264

time, in daily life, the solar wireless charging module can replace the wired charging, safely and conveniently charge the electronic equipment carried with the sound, and realize "space freedom" [8-11].

5. Conclusion

This research aims at the problem of solar car wired charging mode. The main problems include too long power supply leads and too many wire harnesses. The transmission system is disturbed by various factors. For the design and analysis of the solar car model, as well as the problem handling feedback. Due to insufficient energy supply and conductor problems, it is difficult for the trolley to travel in the future. The bq51013b chip is used to build a wireless charging scheme to eliminate the potential interference through contactless power transmission. The compact package and accurate output voltage of the chip have high adaptability to the solar panel, which strongly simplifies the system structure. Realize photovoltaic wireless collaborative power supply and dynamic power allocation. The use of clean energy such as solar energy and wind energy to generate electricity gives priority to power supply, and only the grid is used as a backup energy supplement. The carbon emission of new energy vehicles in the whole life cycle is 92% lower than that of fuel vehicles, which fully meets the national environmental protection requirements. The wireless charging system based on the solar charging vehicle can help the new energy vehicle to improve the endurance capacity and gradually realize the integration of "vehicle energy road cloud".

References

[1] Serag, S., & Echchelh, A. (2022). Technical and economic study for electricity production by concentrated solar energy and hydrogen storage. *Technology and Economics of Smart Grids and Sustainable Energy, 7,* 30.
[2] Caiwei. (2024). Research on wireless charging technology for electric vehicles. *Automotive Maintenance Technician,* (4), 10-11.
[3] Tiwari, S. L., Gaigowal, S. R., & Raut, K. (2024). Design of wireless charging system for E-Vehicle. *AIP Advances, 14*(9), 095110. https: //doi.org/10.1063/5.0218429
[4] Yang, W. T., Li, Z. Q., & Wang, Y. (2024). Design of wireless mobile charging device based on solar energy. *Internet of Things Technology, 14*(10), 86-88.
[5] Liang, G. X. (2022). Design of wireless charger for mobile phone. *Journal of Ningde Normal University (Natural Science Edition), 34*(1), 26-31.
[6] Hou, X. J., Qin, J. P., & Zhang, Y. G. (2023). Wireless charging leisure seat for electronic equipment based on solar power generation. *Science and Technology Entrepreneurship Monthly, 36*(S1), 16-19.
[7] Qi, T. D. (2024). Design of solar wireless charger based on new energy. *Integrated Circuit Applications, 41*(4), 122-123.
[8] Liu, Z. M., Chen, H. Y., Lyu, X., et al. (2024). Optimization design and simulation of new solar energy car. *Journal of Jilin Institute of Chemical Technology, 41*(9), 75-80.
[9] Yang, D., Jiang, L. L., & Wang, X. Y. (2024). Wireless charging station modeling and electric vehicle charging demand forecasting based on solar and wind energy. *Journal of Natural Science of Harbin Normal University, 40*(1), 81-88.
[10] Zhao, H. J., Xu, C., Huang, J., Zhou, Q. H., Yang, T., Zhang, D. Y., & Zheng, W. C. (2025). Optimization model for wireless charging and power saving of smart canes for the visually impaired based on DRL. *Ain Shams Engineering Journal, 16*(7), 103404.
[11] Wan, D. (2021). Research on wireless intelligent charging device for new energy vehicles. *Western Transportation Science and Technology,* (12), 167-169.