Proceedings of the 4th International Conference on Mathematical Physics and Computational Simulation
DOI: 10.54254/2753-8818/2026.34624

Analysis of UAV-WPT for Power Inspection Scenarios

Yihui Li

School of Electrical Engineering, Shenyang Institute of Engineering, Shenyang, China
pinklion01@outlook.com

Abstract. Compared with traditional manual inspection, unmanned aerial vehicle (UAV) has been widely used in power grid inspection because of its own advantages of flexibility, non-contact operation and low safety risk. However, the larger the capacity of the airborne battery, the heavier it will be. However, the UAV itself has strict weight restrictions, and it is impossible to install large batteries casually, which seriously limits the endurance of the UAV. Frequent manual energy supply greatly reduces the efficiency and scope of inspection, and also restricts the development of autonomous unmanned inspection mode. Wireless power transmission technology can realize non-contact energy transfer, which provides an effective and reliable energy supply scheme to break through this bottleneck. This paper sorts out and compares the main charging technology principles applied to UAV charging technology, and sorts out the technical optimization progress of UAV wireless charging around the coupling mechanism, compensation topology and positioning alignment. At the same time, the key technical bottlenecks restricting the application of large-scale projects are analyzed, and the development direction of future research is clarified, which provides valuable reference for the popularization and application of wireless charging technology for unmanned aerial vehicles in the field of power inspection.

Keywords: Unmanned Aerial Vehicle (UAV), Wireless power transmission, Power grid inspection, Coupling mechanism

1. Introduction

Power inspection is a core component in ensuring the safe and stable operation of the power system. As the scale of China's power grid continues to expand, the drawbacks of the traditional manual inspection mode, which are low efficiency and high risk, are becoming increasingly prominent. UAVs, with their advantages such as maneuverability, flexibility, and non-contact operations, have become the primary tool for power inspection. The efficiency of inspection can reach more than 40 times that of manual inspection, which has significantly reduced operational risks and maintenance costs [1].

However, the inherent contradiction between energy density and weight/volume of power batteries makes it difficult to achieve both, which limits the endurance of UAV, and frequent manual recharging significantly affects inspection efficiency [2]. WPT facilitates non-contact energy transfer, which provides a feasible path for autonomous charging of drones, and is of great significance for enhancing the level of intelligence in power inspection [3].

© 2026 The Authors. This is an open access article distributed under the terms of the Creative Commons Attribution License 4.0 (https://creativecommons.org/licenses/by/4.0/).

DOI: 10.54254/2753-8818/2026.34624

At present, relevant research has achieved phased results in the design of coupling mechanisms, compensation topology optimization, positioning and alignment technology, and collaborative scheduling, efficiency improvement and anti-offset capability optimization have been realized. However, existing technologies still face challenges such as rapid efficiency decay in long-distance transmission, inadequate adaptability to extreme environments, imperfect multi-machine collaborative scheduling, and difficulties in balancing lightweight design with high power density, making it difficult to fully meet the needs of complex inspection scenarios [4].

This article focuses on UAV-WPT for power inspection scenarios, systematically reviewing the current research status and optimization paths of related technologies. Identify future research directions for key technical bottlenecks, providing references for technological upgrading and engineering applications in this field.

2. Basic principles of UAV-WPT

UAV-WPT can be divided into two major categories based on energy transmission mechanisms: near-field transmission technology and far-field transmission technology. The comparison of the core characteristics and inspection scenario adaptability of various technologies is schematically shown in table 1 [5].

Table 1. UAV-WPT Type

Category	Type	Transmission Distance	Power Level	Advantage	TRL
Near-field transmission technology	IPT	Centimeter-level	Kilowatt-class	Simple, Low-Cost&Efficient	Mature, engineering application
	MCR-WPT	Meter-level	Hundred-watt class	Offset-Resistant&Penetrating	Mature, mainstream, established
	CPT	Millimeter-level	Kilowatt-class	Low-Radiation&Slim	Lab-scale
Far-field transmission technology	MPT	Kilometer-level	Kilowatt-class	Dynamic&Wide-Coverage	Lab-scale
	DLC	Kilometer-level	Kilowatt-class	High-Density & Directional	Prototyping

2.1. Core principle of near-field wireless charging technology

Near-field wireless charging relies on electromagnetic induction or magnetic coupling resonance to transmit energy, which is concentrated between the transmitting and receiving ends,with high transmission efficiency and minimal environmental interference, which meets the various requirements of environmental factors in power inspection scenarios.

Inductive Power Transfer (IPT) is based on electromagnetic induction and comprises transmitting/receiving coils, an inverter circuit, and a rectifier circuit. Direct current (DC) is inverted into alternating current (AC) through high-frequency inverter, which excites the coil to generate an alternating magnetic field. The receiving coil induces an electromotive force, which is then rectified back to DC to power the UAV. The structure is simple and the transmission efficiency is high, but the transmission distance is short and the anti-offset capability is weak.

Microwave Power Transfer(MCR-WPT). Its principle is to increase the resonant circuit topology on the basis of induction, so that the frequency of the receiver coil is the same as that of the

DOI: 10.54254/2753-8818/2026.34624

transmitter coil, and the energy can be transmitted efficiently through the magnetic field. Long transmission distance, high anti-offset performance, lower loss, and high efficiency within a certain offset range, which is more suitable for wireless charging of unmanned aerial vehicles.

Capacitive Power Transfer (CPT) uses alternating electric fields as the transmission medium and relies on the formation of capacitive coupling between plates to pick up energy. Low electromagnetic radiation, minimal interference to airborne equipment, lightweight and thin plates for easy conformal installation. However, the transmission power and efficiency are significantly influenced by the plate area and spacing.

2.2. Core principle of far-field wireless charging technology

Far-field technology enables dynamic aerial recharging of drones and expands the operational range through long-distance energy transmission via electromagnetic waves.

Microwave Power Transfer(MPT)utilizes microwave directional radiation to transmit energy and consists of a transmitting antenna, a receiving antenna, and a conversion circuit. With a long transmission distance, the overall efficiency is relatively low, and the equipment is bulky and expensive.

Distributed Laser Charging(DLC), uses a high-energy-density laser as a carrier, powering the drone through photoelectric conversion. It has good directivity and concentrated energy, but it is easily affected by environmental factors such as rain, fog, and obstruction, thus requiring high standards for alignment and safety control.

3. UAV-WPT optimization for power inspection scenario

3.1. Coupling mechanism design and optimization

The coupling mechanism, serving as the core energy transmission carrier in the wireless charging system for power inspection UAVs, directly determines both the energy coupling efficiency and misalignment tolerance capability. Current research primarily focuses on three key directions: innovative coil structure design, material and magnetic core optimization, and intelligent parameter tuning [6].

Innovation in coil structure is the key pathway to enhancing anti-offset performance and coupling efficiency. In this regard, aiming at the core problem of insufficient tolerance of omni-directional offset in UAV wireless charging system, in 2025, Chongqing University, together with China Southern Power Grid Wireless Transmission Joint Laboratory and Guangxi Power Grid Energy Technology Co., Ltd., proposed a Co-form magnetic coupling mechanism, and its structure is shown in Fig 1. It consists of a series coil of coaxial vertical solenoid wound in the opposite direction at the transmitting end and a series coil of vertical solenoid wound in the same direction at the receiving end. An annular reinforced uniform magnetic field is constructed by the spatial superposition of the reverse magnetic fields of the two coils, and the stable transmission with output power of 102W and transmission efficiency of 85% ~ 90.2% is realized under a plane offset of plus or minus ±20mm and a full-angle rotation offset of 0 ~ 180. The coil structure is shown in fig 1. This scheme breaks through the traditional path that the anti-offset performance depends on circuit and algorithm compensation, realizes high-stability transmission with pure coil structure innovation, and takes into account the adaptability of multi-models, which has outstanding engineering landing value [7].

DOI: 10.54254/2753-8818/2026.34624

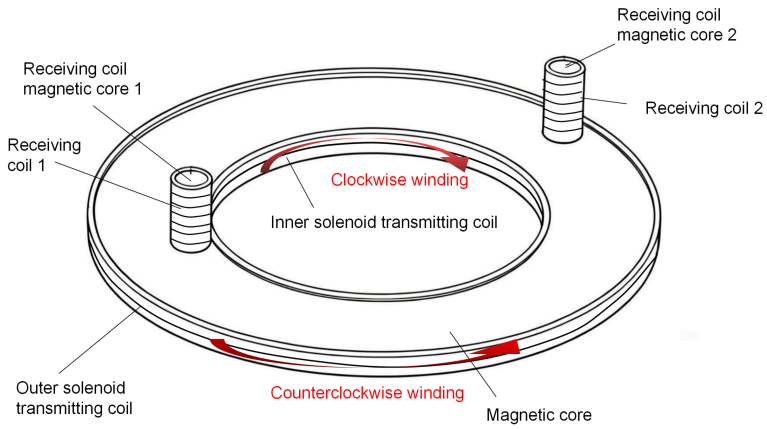

Figure 1. Co-form magnetic coupling mechanism [7]

In the optimization and innovation of materials and magnetic cores, the team led by Song Liye at Liaoning Technical University adopted manganese-zinc ferrite as the core material, which matches the system's resonant frequency, and added inclined surface structures to both the top of the receiving coil and the bottom of the central cylindrical core [8-11]. This optimization solution is implemented in conjunction with the supporting topology and coil parameter optimization design, enables the supporting system to achieve an optimal wireless power transfer efficiency of 97.676%. It significantly enhances the coupling tightness and positional adaptability of the coupling device [10, 11].

The parameter optimization method provides technical support for maximizing the performance of the coupling mechanism. Existing research predominantly employs intelligent algorithms to conduct multi-objective optimization of parameters such as coil turns, dimensions, and spacing. In 2025, a team from Nanjing University of Posts and Telecommunications proposed a multi-parameter collaborative optimization method based on adaptive genetic algorithms to address alignment deviations, simultaneously optimizing core parameters such as offset distance and transmission distance fig. 2 shows the algorithmic process. Actual testing showed that the optimized system achieved a peak efficiency of 81.6%, marking an 8.2% improvement over the pre-optimization performance. It plays a crucial supporting role in enabling the alignment-free and highly stable transmission technology for multi-device wireless charging to achieve practical implementation [12].

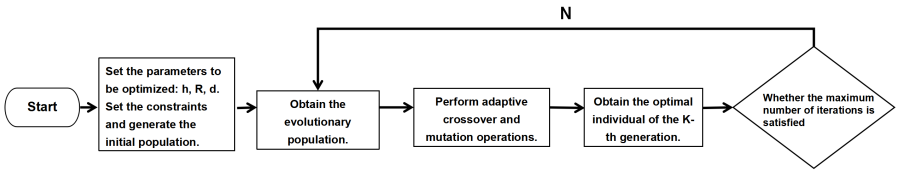

Figure 2. Adaptive genetic algorithm [12]

3.2. Compensation topology and control strategy optimization

The compensation topology and control strategy directly determine the system's transmission efficiency, output stability, anti-misalignment capability, and environmental adaptability. In power inspection scenarios, the onboard UAV systems face stringent constraints on weight and size,

DOI: 10.54254/2753-8818/2026.34624

making it challenging for traditional compensation topologies to achieve a balance between minimalistic secondary-side design, offset tolerance, and constant current/voltage output [2].

Numerous existing studies have proposed innovative solutions to this technical challenge. Xia Chenyang's team proposed the primary-side LCL - secondary-side LCC hybrid resonant network, which achieves load-independent constant current output, primary-side coil constant current, and resonant frequency locking simultaneously without requiring multi-loop control, significantly simplifying the system structure. The circuit diagram is shown in fig. 3. This topology achieves over 90% efficiency under overload conditions and effectively suppresses output fluctuations caused by sudden battery load changes, reducing both control complexity and hardware weight in onboard charging systems [11].

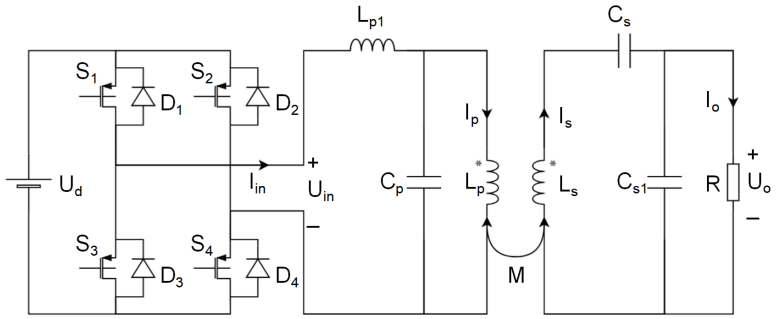

Figure 3. LCL/LCC resonant tank [11]

Additionally, to address the topology adaptation issue for the entire CC-CV charging process of drone lithium batteries, the research team at Shandong Electric Power Engineering Consulting Institute Co., Ltd. has proposed a variable-structure switchable topology. By utilizing a minimal number of switches to achieve switching between different compensation topologies, the system can maintain highly efficient output during both constant-current and constant-voltage charging phases. Its circuit diagram is shown in fig.4. Thus, a smooth transition between charging modes can be achieved without the need for complex closed-loop regulation. This design significantly simplifies system control, enhancing operational stability and practicality in field scenarios [6].

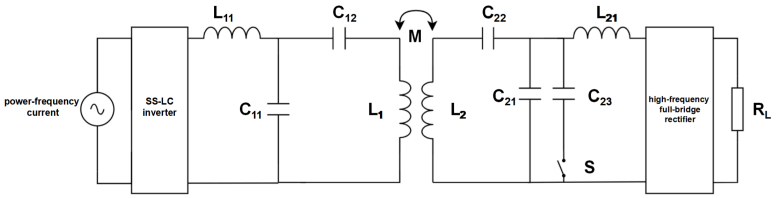

Figure 4. Single-switch topology [6]

Further research has introduced Chebyshev filter theory into the design of compensation matching networks. By equivalently treating the fluctuations of mutual inductance and load resistance as frequency variables in filter design, a matching network with capabilities to resist mutual inductance variations and load changes is developed. It represents a novel approach to the high-stability design of industrial drone charging systems [9].

DOI: 10.54254/2753-8818/2026.34624

3.3. Positioning and alignment technology optimization

In power inspection scenarios, UAVs are prone to positional and angular deviations during landing. Traditional wireless charging systems have low alignment tolerance, making it difficult to ensure charging stability and efficiency.

In the field of magnetic alignment, Feng Tianxu's team pioneered the development of biorthogonal bipolar coils and targeted magnetic field control technology. Magnetic field alignment can be completed within 85ms by regulating the excitation current, eliminating the need for posture detection or bilateral communication, while maintaining high-efficiency transmission even under significant misalignment and full-angle conditions, effectively addressing the sharp decline in charging efficiency caused by landing deviations of inspection drones [13].

Addressing the lightweight requirements for inspection UAVs, the Harbin Institute of Technology team proposed a compact positioning-free omnidirectional charging solution. The omnidirectional free alignment is achieved through a flux-complementary design featuring a target-shaped transmitter and orthogonal receiver. By leveraging a flux-complementary design between the target-shaped transmitter and orthogonal receiver, it achieves free omnidirectional alignment. The lightweight 184g receiver can be directly integrated into the landing gear。 It can be directly integrated into landing gear without interfering with inspection tasks, meeting the onboard power replenishment needs of UAVs [14].

4. Challenges and prospects

To sum up, this paper systematically combs the principle of UAV-WPT for power inspection scene, and comprehensively summarizes the research progress and optimization path of the three core dimensions of coupling mechanism design, compensation topology optimization, positioning and alignment control. At present, the relevant research has achieved phased results in coil structure innovation, high-order topology design and alignment strategy optimization, and some technical schemes have been verified in the laboratory and applied in a small scale. However, combined with the exclusive operation and maintenance requirements of the power inspection scene and the engineering landing requirements, there are still many key problems that have not been systematically solved, mainly in the following aspects.

At present, the research has achieved phased optimization results in core modules such as coupling mechanism, compensation topology and positioning alignment. Collaborative optimization and engineering adaptation design of all modules and working conditions of wireless charging system. In the current study, the research has achieved phased optimization results in the core modules such as coupling mechanism, compensation topology, positioning and alignment, the idea of full-module collaborative optimization is generally adopted, and the performance verification is only completed under ideal working conditions in the laboratory, which is obviously out of line with the landing requirements of the project. In the existing scheme, the coupling mechanism and compensation topology optimization are separated from each other, which is prone to resonance mismatch and sudden drop of efficiency in the face of field landing deviation, temperature and humidity fluctuation, load change and other working conditions, and it is difficult to give consideration to airborne lightweight and high-power and efficient transmission. The dependent high-precision positioning scheme is easy to fail in the inspection site with tower shielding and strong electromagnetic interference, and it also aggravates the airborne load pressure. At the same time, the existing design does not consider the engineering constraints such as extreme outdoor environments, remote areas without a power grid, unattended operation and maintenance, which

DOI: 10.54254/2753-8818/2026.34624

leads to the limited engineering application of laboratory prototypes. Therefore, in the future, with the constraints of all working conditions and engineering requirements as the core, the whole system will be integrated and optimized to achieve stable and efficient transmission under all working conditions. At the same time, environmental adaptation and operation and maintenance requirements are included from the design source to form a mature engineering scheme that adapts to the power inspection scene, providing core support for the large-scale landing of technology. But most of them are optimized from a single module, and the performance verification is only completed under the ideal conditions in the laboratory. There is a lack of system-wide collaborative design to simulate the real working conditions of power inspection, which is out of touch with the landing requirements of the project. In the existing scheme, the coupling mechanism and compensation topology optimization are separated from each other. In the face of field landing deviation, temperature and humidity fluctuations, load changes and other working conditions, it is easy to appear resonance mismatch and efficiency plummet, so it is difficult to give consideration to airborne lightweight and high-power and efficient transmission. The dependent high-precision positioning scheme is easy to fail in the inspection site with tower shielding and strong electromagnetic interference. It also aggravates the airborne load pressure. At the same time, the existing design does not consider the engineering constraints such as extreme outdoor environments, remote areas without a power grid, unattended operation and maintenance, which leads to the limited engineering application of laboratory prototypes. Therefore, in the future, with the constraints of all working conditions and engineering requirements as the core, the whole system will be integrated and optimized to achieve stable and efficient transmission under all working conditions. In corporate environmental adaptation and operation and maintenance requirements from the design source. They form a mature engineering scheme that adapts to the power inspection scene, providing core support for technology scale landing. The static platform charging technology of UAV has been relatively mature. Some pilot applications have been completed. But the coverage is limited and it cannot adapt to long-distance cross-regional inspection. Although the principle of airborne dynamic energy replenishment technology has been verified in the laboratory, it has not yet been put into engineering application due to transmission efficiency, airborne weight, environmental interference, safety compliance and other factors. Most of the existing researches study static and dynamic energy supplement separately, but only one energy supplement method can not control the energy supplement demand of the whole scene of power inspection well. Therefore, the future needs the scene adaptation and integration of technology.

At present, the research has achieved phased optimization results in core modules such as coupling mechanism, compensation topology and positioning alignment. But most of them are optimized from a single module. the performance verification is only completed under the ideal conditions in the laboratory. There is a lack of system-wide collaborative design to simulate the real working conditions of power inspection, which is out of touch with the landing requirements of the project. In the existing scheme, the coupling mechanism and compensation topology optimization are separated from each other. In the face of field landing deviation, temperature and humidity fluctuations, load changes and other working conditions, it is easy to appear resonance mismatch and efficiency plummet, so it is difficult to give consideration to airborne lightweight and high-power and efficient transmission. The dependent high-precision positioning scheme is easy to fail in the inspection site with tower shielding and strong electromagnetic interference. It also aggravates the airborne load pressure. At the same time, the existing design does not consider the engineering constraints such as extreme outdoor environment, remote areas without power grid, unattended operation and maintenance, which leads to the limited engineering application of laboratory

DOI: 10.54254/2753-8818/2026.34624

prototypes. Therefore, in the future, with the constraints of all working conditions and engineering requirements as the core, the whole system will be integrated and optimized to achieve stable and efficient transmission under all working conditions. Incorporate environmental adaptation and operation and maintenance requirements from the design source. They also form a mature engineering scheme that adapts to the power inspection scene, providing core support for technology scale landing. The static platform charging technology of UAV has been relatively mature. Some pilot applications have been completed, but the coverage is limited and it cannot adapt to long-distance cross-regional inspection. Although the principle of airborne dynamic energy replenishment technology has been verified in the laboratory, it has not yet been put into engineering application due to transmission efficiency, airborne weight, environmental interference, safety compliance and other factors. Most of the existing researches study static and dynamic energy supplement separately, but only one energy supplement method can not control the energy supplement demand of the whole scene of power inspection well.Consequently, the future needs the scene adaptation and integration of technology.In view of the special sections where fixed ground stations cannot be deployed, such as crossing rivers and canyons, the optimization of short-distance relay dynamic energy replenishment technology is carried out to fill the coverage blind spots of fixed stations. For emergency repair scenes such as typhoon, mountain fire and earthquake, the engineering adaptation of lightweight and portable long-distance energy replenishment technology is carried out to solve the energy replenishment problem in emergency scenes. At the same time,the compatibility and adaptation of static energy replenishment and dynamic energy replenishment technology should be advanced, and a full-scene energy replenishment system should be formed with static fast charging of fixed stations as the main body, supplemented by scene-based dynamic energy replenishment,so as to provide energy replenishment solutions with strong adaptability and high reliability for different inspection scenes.

With the development of power inspection to scale and cluster, multi-UAV cooperative inspection has become the mainstream mode of long-distance transmission lines and large-scale substation inspection. It is urgent to deploy a wireless charging platform suitable for simultaneous charging of multiple machines in substations and key nodes of lines. However, most of the existing research focuses on the single-load scenario of a single UAV. In the multi-load synchronous charging scenario, problems such as cross-coupling of multiple receivers, uneven magnetic field distribution, intensified eddy current heating, and greatly reduced overall transmission efficiency of the system are prone to occur, which makes it difficult to meet the synchronous charging requirements of multi-machine collaborative inspection. Therefore, in the future, it is necessary to design a special multi-load coupling mechanism and system for multi-machine cooperative inspection, to improve the utilization rate of space magnetic energy, reduce the mutual interference between multiple receivers, optimize the transmission efficiency and output stability of the system under multi-load conditions, and at the same time, support the intelligent scheduling strategy of multi-machine cooperative charging, dynamically allocate charging power according to the priority of inspection tasks and the remaining power of drones, maximize the resource utilization rate of charging stations, and meet the large-scale application requirements of multi-machine cooperative inspection.

On the whole, all research directions in this field in the future will always focus on the exclusive needs of power inspection scenes, Therefore, the mature upgrade of technology and large-scale engineering application are finally realized, and the short battery life of the electric power inspection drone is completely solved. In this way, it will promote the comprehensive upgrade of power inspection from manual assistance to full autonomy and unmanned. It will also provide technical support for the safe and stable operation of new power systems.

DOI: 10.54254/2753-8818/2026.34624

5. Conclusion

Magnetic coupling resonant wireless charging is the mainstream adaptation technology route of electric patrol UAV. Innovation of coupling mechanism, optimization of compensation topology and upgrading of positioning and alignment technology can significantly improve the transmission efficiency, anti-offset ability and working condition stability of the system. The current technology still needs to break through the core bottlenecks such as system-wide collaborative adaptation, extreme environmental tolerance, and multi-machine collaborative energy supplement. In the future, it should develop in the direction of light weight, high reliability and full autonomy and intelligence, and fully adapt to the engineering application requirements of power inspection scenarios.

References

[1] W. Q. Li, Application of UAV technology in power industry. Lighting Electr., 1, 254–256 (2026).
[2] J. J. Zou, Discussion on strongly coupled wireless power transfer method for platform UAV. China Autom. Identif. Technol., 6, 43–46 (2025).
[3] B. Huang, Y. W. Wei, T. Y. Yang and Z. G. Ye, Research on a wireless power transfer charging platform for autonomous inspection UAVs. Autom. Instrum., 41, 22–31 (2026).
[4] Q. X. Yang, P. C. Zhang, L. H. Zhu, M. Xue, X. Zhang and Y. Li, Key fundamental problems and technical bottlenecks of wireless power transmission technology. Trans. China Electrotech. Soc., 30, 1–12 (2015).
[5] T. Y. Chen, Z. Y. Zheng, X. T. Yu, S. Li and C. Chen, Design and optimization of couplers for UAV wireless charging systems based on fractal geometry. Acta Armamentarii, 46, 250810 (2025).
[6] S. Li, X. Y. Ding and Z. X. Zhu, Single-switch constant current constant voltage wireless charging device for power line patrol UAV. Electr. Eng., 22, 54–57 (2025).
[7] Z. P. Zuo, Y. J. Li, B. Peng, X. Dai and S. N. Chen, Omnidirectional misalignment tolerant unmanned aerial vehicle wireless power transfer system with conform magnetic coupler. Trans. China Electrotech. Soc., 40, 4356–4368 (2025). https: //doi.org/10.19595/j.cnki.1000-6753.tces.242149
[8] M. Zhang, Y. Y. Zhu and L. Wu, Research on anti-offset characteristics of overlapping array coil based on MCR-WPT system. Manuf. Autom., 46, 17–21 (2024).
[9] L. Yu, Y. D. Zhou, X. S. Huang, Y. Zeng, Y. Gao, X. Y. Lu and T. Zeng, Research on magnetic coupling wireless charging system for industrial UAV. J. Univ. Electron. Sci. Technol. China, (2026).
[10] L. Y. Song and J. Y. Jiang, Field effect analysis and optimization of wireless charging coil for power inspection UAV. Manuf. Autom., 45, 58–62 (2023).
[11] C. Y. Xia, G. P. Chen, S. Y. Ren, K. Lei, Y. Zhang and Y. J. Sun, Wireless power transfer system using composite resonant network for constant-current power supply of load. Autom. Electr. Power Syst., 41, 6–12 (2017).
[12] B. Jiang, Z. B. Wang, X. Liu and K. Tao, Research on optimization methods for coupling coils in multi-load MCR-WPT systems. J. Electron. Meas. Instrum., 39, 112–120 (2025).
[13] T. X. Feng, Y. X. Xu, J. C. Jiang, K. Shi, P. Y. Wang and J. Hou, An omnidirectional wireless power transfer system via two orthogonal bipolar coils and targeting magnetic field control for UAVs. IEEE Transactions on Power Electronics, 41, 7084–7101 (2026).
[14] S. Wu, C. W. Cai, X. C. Liu, W. P. Chai and S. Y. Yang, Compact and free-positioning omnidirectional wireless power transfer system for unmanned aerial vehicle charging applications. IEEE Transactions on Power Electronics, 37, 8790–8794 (2022).