Proceedings of the 2nd International Conference on Biological Engineering and Medical Science (ICBioMed 2022), Part I
DOI: 10.54254/2753-8818/3/20220268

Comparison of COVID-19 Live Attenuated and mRNA Vaccines in Manufacturing and Clinical Treatment

Ge Gao[1, 4, †], Yuhan Hu[2, †] and Fengxuan Li[3, †]

[1] Faculty of Agriculture and environment science, Macdonald campus McGill university, 21111 Rue Lakeshore, Sainte-Anne-de-Bellevue, Quebec, Canada, H9X 3V9
[2] College of Biotechnology and Pharmaceutical Engineering, Nanjing Tech University, 30 South Puzhu Road Jiangpu Street, Pukou District, Nanjing City, China, 210000
[3] College of Life Science, Tianjin Normal University, 393 Binshui West Street, Xiqing District, Tianjin China, 300387

[4] ge.gao3@mail.mcgill.ca
[†]These authors contributed equally.

Abstract. In modern times, the global effects of the COVID-19 pandemic are immeasurable. It causes a great threat to the economic development, health and safety of human society. The most basic and safest approach is to study and improve the efficiency of the COVID-19 vaccine. The diverse characteristics of different COVID-19 vaccine types mean various effect routes and clinical application ranges. This paper provides a comparative analysis of different vaccines by comparing two types of COVID-19, combining their production procedures, vaccine routes and mechanisms, clinical applications, and possible side effects. Through our discussion and analysis, we find that the production patterns, effective mechanisms, and possible side effects differ between different vaccines, and the COVID-19 vaccine has been improved today. Comparison and synthesis to analyze the next stage of COVID-19 vaccine research and development. Recognizing the diversity of COVID-19 prevention and control, the development of the COVID-19 vaccine will have a great impact on human health benefits.

Keywords: COVID-19, live attenuated vaccines, mRNA vaccine

1. Introduction

In recent society, COVID-19 has across the whole world. The presence of COVID-19 can have important effects on the economy, security and stability of the region involving the virus. How to improve the severe epidemic situation in the world, protect the lives and health interests of people around the world, and develop a safe and effective COVID-19 vaccine is crucial. Combined with the growing medical experimental technology, humans eventually choose to develop the COVID-19 vaccine to achieve safe, effective and early preventive effects. The most significant symptoms of COVID-19 include causing severe pneumonia, and it may even eventually lead to patient death due to dyspnea. The lung tissue fibrosis caused by it is irreversible, and it will still have a negative impact on patients in the following life, even after recovery [1]. Unlike other common infectious diseases, the wide transmission range of COVID-19, high patient mortality rate and serious sequelae are extremely serious health problems for contemporary society. The body organ damage caused by COVID-19 to infected persons

© 2026 The Authors. This is an open access article distributed under the terms of the Creative Commons Attribution License 4.0 (https://creativecommons.org/licenses/by/4.0/).

DOI: 10.54254/2753-8818/3/20220268

is irreversible, and the effect advantage of the virus vaccine is that it can significantly inhibit further virus proliferation in the early stage of infection. Fundamentally, the COVID-19 vaccine development effectiveness is even more important than the treatment research of patients. Structurally, coronaviruses can be divided into α, β, γ and δ. Coronaviruses that can cause human disease are generally of the types α and β. COVID-19 belongs to the genus of coronavirus β that also has a structural envelope, the particle shape is round or oval, often multilinear. The pathological classification of COVID-19 belongs to the coronavirus, which is in the same classification as the SARS virus in 2003. But medically, the two kinds of coronaviruses are not identical. Combined with the severity of the novel coronavirus, researchers need to be more prepared to face the severe challenges of COVID-19. COVID-19 is a virus of positive-stranded ssRNA virus, which is a class of virus with virus RNA that can be directly used as an mRNA template for translation and produce viral protein. Sending mRNA to the host cytoplasm is necessary for the vaccine to take effect. As a measure to respond to the COVID-19 pandemic, mRNA vaccines were first licensed as one of the treatments in many countries. Moreover, the popularity of vaccines in society has greatly reduced their transmission rate and pathogenicity in some areas. Many areas have resumed their daily work and life due to the availability of vaccines. However, the widely used COVID-19 vaccines today have some utility, but there is still room for improvement. First, COVID-19 is theoretically spread globally, and the huge number of vaccinated audiences is so what really considered. Effectively reducing vaccine production procedures and production costs will have a significant effect on the spread of COVID-19 vaccines around the world in the future. Therefore, the simplification of the vaccine production procedures is particularly important. Secondly, the improvement of the COVID-19 vaccine effect pathway is conducive to its effect efficiency in clinical application, and it can even cope with the possible viral mutations in the future. The sequelae of COVID-19 vaccination are also factors that researchers should consider. Overview, of this comparison of the production procedures by comparing live attenuated vaccine and mRNA. The translation efficiency of mRNA was analyzed from the level of RNA ribotide structure. Microscopic-level molecular modelling has a great impact on mRNA manufacturing, and the relationship between these microscopic structures and the translation efficiency of mRNA will be analyzed and reviewed here.

At the same time, the effect mechanism and route of the vaccine will also be compared and analyzed. Combined with the infection and value-added characteristics of the coronavirus, the different vaccine effector mechanisms and transcriptional conditions will cause different degrees of differences and effects. Comparison of the screening of vaccine vector proteins and the effects of different conditions on mRNA. In addition, this paper will review the effects of clinical trials, compare the immune responses at the application level, and discuss the side effects between live attenuated vaccines and mRNA vaccines. Reducing vaccine side effects could help to expand the scope of the vaccinated population. This paper hopes to have a guiding role in vaccine research and development.

2. Manufacturing procedures for SARS vaccines

2.1. Live attenuated vaccine

Live attenuated vaccines are viruses that have been treated to remove their pathogenicity while retaining the immunogenicity of the antigen and still causing the immune system to produce antibodies. According to this principle, we edit and modify the genome. We can edit the SARS-COV-2 genome to reduce other symptoms, such as lung symptoms, leading to a series of live attenuated vaccines that are more effective and safer for humans. The creation of strains that are temperature- or cold-sensitive, or that have had their codons optimized, can result in live attenuated viruses. Codon pair deoptimization (CPD) is genetic engineering used to attenuate viruses and it is recently used for the SARS-COV-2.CPD is widely used to make vaccines because it can quickly produce highly effective attenuated viruses. Statistically, underrepresented codon pairs increase in the host. As can be seen from figure1, there are 12 Subgenomic fragments selected for recording. It is closely related to the realization of this reverse genetic system, resulting in the generation of viral mutants and the realization of viral decay [2].

DOI: 10.54254/2753-8818/3/20220268

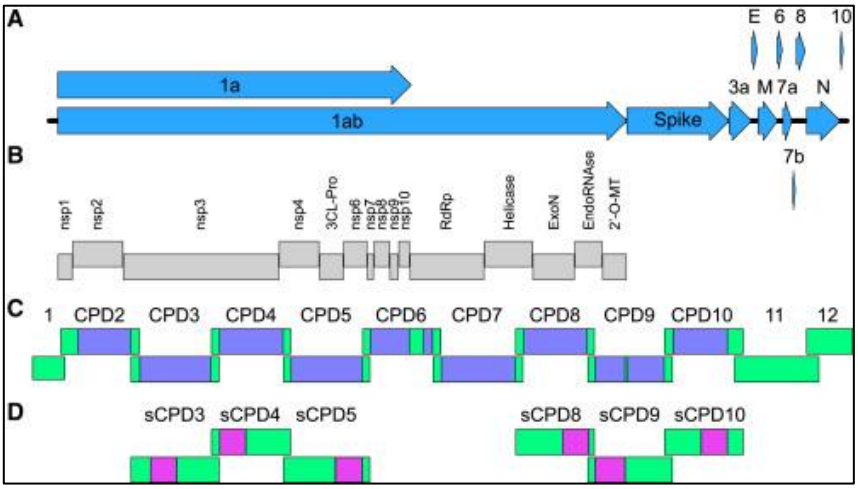

Figure 1. The graph shows the fragments for the recording technology and several live attenuated virus candidates from different parts of the SARS-COV-2 genome [3].

A previous study showed that candidate sCPD9, a live attenuated virus, was injected into hamsters in a clinical trial to prevent infection with wild-type SARS-COV-2. No disease or weight loss was observed in vivo despite the high susceptibility of the organism to the virus.

2.2. mRNA vaccine

mRNA vaccine manufacturing procedures can be summarized into 6 protocols: antigen plasmid extraction, fermentation, quality test, purification, transcription and encapsulation. Since mRNA is composed of a 5' cap, 5' UTR, an open reading frame, 3' UTR and poly-A tail, molecular modelling of these compositions is crucial for mRNA manufacturing.

The 5' cap is essential for the start of mRNA translation, signal recognition, and maintaining stability. After the 5' cap addition, free terminal phosphate groups at the 5' end have been removed and replaced by the OH group, which makes the mRNA more stable against RNase. Cap analogs termed anti-reverse cap analogs (ARCAs) have been applied to make sure the methyl group replaces the OH in the appropriate place, avoiding the isomer formation and effect on downstream processes [3]. Moreover, mRNA from DC cells that with the ARCAs 5' cap like m27, 2'−OGppSpG (β-S-ARCA), demonstrates greater stability than others [3].

Translating efficiency is the first consideration for the 5' untranslated region (UTR) design. 43S pre-initiation complex insertion is necessary for locating the starting point of translation. Research has shown that translation efficiency is inversely proportional to its size, indicating the 5' UTR needs to be short to mateine stable structure and proper functions [4]. Meanwhile, studies showed that upstream ORFs should be excluded from 5' UTR to avoid starting the wrong translation [5]. When it comes to the 3' UTR, the main concerns are the same as the former: increase stability and translation efficiency. Studies have shown that two human β-globin 3' UTR (2 hBg) can enhance stability and translation efficiency [2], and the possibility is then demonstrated by the BioNTech mRNA vaccine.

3. Vaccine pathway/mechanisms

3.1. Live attenuated vaccine

The considered live attenuated vaccines against SARS-COV-2 are unique in their qualities (Figure 2) [6]. SARS-COV-2 wild-type strains are droplet-transmissible and reproduce in the upper and lower respiratory tract as well as the lungs. TS mutant strains and strains that have acclimated to the cold cannot. The encoding-optimized strains replicate more slowly in humans and in vitro than wild-type strains. These low replication rates are thought to elicit strong humoral and cellular immune responses,

DOI: 10.54254/2753-8818/3/20220268

albeit with attenuated expression. Only one spike protein is encoded by the mRNA and adenovirus vector vaccines, and there are few immune reactions to this viral antigen. Nevertheless, live attenuated vaccines can boost immunity to certain viral antigens, increasing the likelihood that they will provide protection [7]. For instance, adenovirus vector vaccines encoding nucleocapsid proteins are effective in protecting against infection. Compared to existing mRNA or adenovirus vector vaccines, live attenuated vaccines can stimulate immune responses to multiple antigens more effectively.

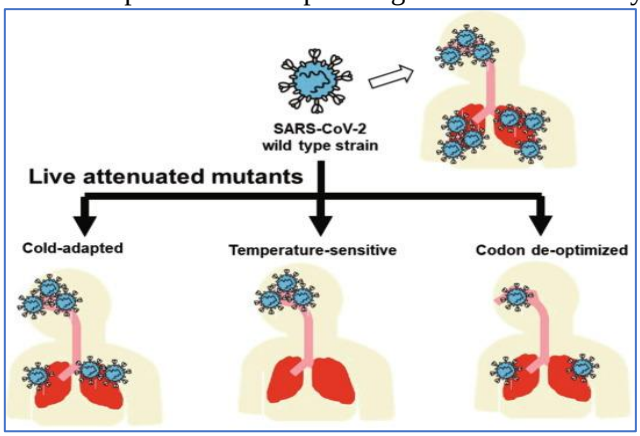

Figure 2. Live attenuated mutants can be classified into 3 types: clod-adapted, temperature-sensitive and codon deoptimized strains.

Live SARS-COV-2 attenuated strains can be administered intravenously and doing so increases IgA production and may even prevent infection with mutant strains. Live attenuated influenza vaccines induce the secretion of IgA and CD8+ T cell responses when cold-adapted strains are administered intranasally. This secreted IgA promotes cross-protection against various influenza virus strains [7].

Even though live attenuated vaccines are among the most effective vaccines, there are still some certain issues. It is necessary to assess the adverse effects of live attenuated vaccine strains that are administered intranasally. The infection with SARS-CoV-2 is related to thrombosis and cytokine storm induction [7]. Odour disturbance has also been noted as a COVID-19 symptom, but the exact mechanism remains unresolved. The temperature-sensitive strains we isolated can replicate in the nasal cavity like wild strains and may damage epithelial tissue. Therefore, a full assessment of their efficacy is needed.

3.2. mRNA vaccine

As a response to the COVID-19 pandemic, mRNA vaccines have first time been licensed in many countries as one of the treatments. Sending mRNA into the host cytoplasm is necessary for the vaccines to take effect. Thus, the proper and efficient system is essential for supporting this process. Since mRNA is larger than the size that can passively diffuse through the cell membrane, carrier proteins are needed for transport. For the COVID-19 vaccine, lipid nanoparticles (LNP) are chosen as carrier proteins. LNP is composed of 4 parts: ionizable/cationic lipids for mRNA complexation, nanoparticle-stabilizing cholesterol, helper phospholipids for intracellular release and PEGylated lipids for reducing unessential interaction [8]. Ionizable lipids are one of the most crucial parts of the mRNA delivery process. Commonly, ionizable lipids are more favorable than cationic lipids due to their safety and neutral surface charge. High cation-releasing during acid environments is another preferable reason [8]. When the LNP that carried the SARS Cov-19 mRNA into the host cell, the acidic condition could change its surface into a positive charge, allowing the mRNA released into the cytoplasm. Another critical factor is the ratio of helper phospholipids, cholesterol and PEGylated lipids, which could affect the efficiency of the mRNA vaccine.

Antigen-presenting cells (APCs) like dendritic cells may capture the s protein provided by mRNA after the intramuscular injection of the mRNA vaccine. By MHC complexes, APCs together with the antigen migrate to the lymph nodes, where they recognize the foreign protein and activate T lymphocytes.

DOI: 10.54254/2753-8818/3/20220268

Then the CD4+ cells and CD8+ cells can induce T-helper cells (Th2) and cytotoxic T cells (CTLs) formation. T follicular cells (Tfh) that are derived from CD4 help initiate germinal center (GC) reaction, resulting in the memory B cells and long-living plasma cells formation. Since the mRNA vaccine neither mimics natural infection as the live attenuated vaccine does nor requires entering the nucleus, it is safer and might be less harmful in immunocompromised people. However, animal studies on mice have shown that only a high mRNA vaccine dose could induce the SARS-CoV2-specific protective antibody (Ab) to trigger a humoral response [9]. In the meantime, Figure 3 illustrates that SARS-CoV-2 neutralizing geometric mean titers (GMTs) are proportional to the dose level [10], indicating booster shots are necessary for maintaining functional Ab levels at lower vaccine doses. Besides, the mRNA vaccine may have low immune priming if the efficacy of delivery is low.

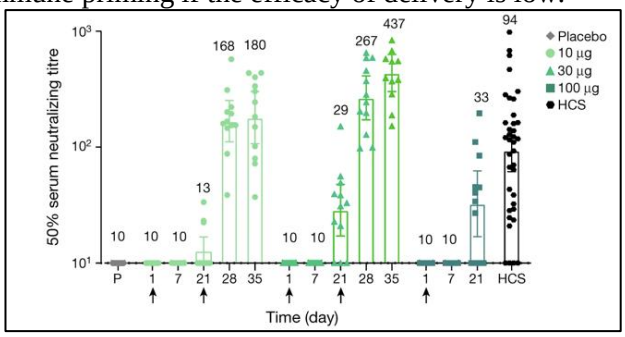

Figure 3. The 50% SARS-CoV-2 neutralizing GMTs.

4. Clinical experiments, effectiveness and side effects

4.1. Live attenuated vaccines

There are 3 types of live attenuated SARS-CoV-2 vaccine candidates: cold-adapted, temperature-sensitive and codon de-optimized. Since CODAGENIX Inc. demonstrates that the latter virus strains proliferate much slower than the wild-type strain but trigger a stronger humoral and cellular response in host cells, which satisfies the standard as being a live attenuated vaccine [7]. Moreover, compares to the mRNA vaccines that only contain spike protein, which results in a limited immune response to only specific antigens; live attenuated vaccine can mimic natural infection, thus providing a wider range of protection.

Meanwhile, the defects of the SARS-CoV-2 live attenuated vaccines are obvious. The biggest concern is the possibility that may revert back the attenuated virus to the wild-type strain which is outright virulent and may be harmful in immunocompromised patients. Also, the multiplication of the live attenuated virus in the nasal cavity could trigger the cytokine storm in the host, leading to epithelial tissue damage and more adverse reactions. However, more research is needed to figure out the detailed mechanisms behind it.

4.2. mRNA vaccines

In this part, we would mainly talk about the Pfizer/BioNTech vaccine (BNT162b2) as an example. A total of 43,548 volunteers participated in the clinical trials and approximately half of them received injections and the others received placebos, manifesting the total vaccine efficacy (EV) of BNT162b2 was 95% and 94% for those who were over 65[9]. Overall, these studies illustrate the high EV of mRNA vaccine in combating SARS-CoV infection, but the side effects of this vaccine type are also obvious. In most cases, the reported side effects are injection site ache, muscle pain and fatigue. Only a small portion has severe influence like lymph node swelling, nausea and diarrhea.

5. Discussion

We agree and see considerable potential in the development of new vaccines, mRNA vaccines and recombinant vaccines. The development of vaccines using nucleic acids is progressing rapidly due to

DOI: 10.54254/2753-8818/3/20220268

conventional gene editing techniques and, of course, it is possible to immunize against the virus with nucleic acids if the appropriate codons of the coronavirus genome are known. Studies have also shown that vaccines using nucleic acids have a longer-lasting immune effect due to the immune response triggered by T lymphocytes and that vaccines are more stable during storage and transport, but they also require strict cold chain protection. So global availability is not guaranteed. In recent years, mRNA vaccines have made significant discoveries in foreign countries. However, earlier this July, the first Chinese mRNA vaccine, the ArCoV vaccine, was also developed, providing new insights into the safety and strong immune response to vaccination. Although live attenuated vaccines may have genetic mutations and toxicity that may affect humans, as well as pathogenic factors due to the growth of live attenuated strains, they are highly effective compared to other types of vaccines. On the other hand, it is well known that inactivated vaccines are widely used. This is appropriate for nowadays when the field of vaccines is not yet fully developed. Once vaccinated, they are less effective but have fewer side effects and do not cause unimaginable consequences.

In general, the comparison between live attenuated vaccine and mRNA vaccine shows that there is no absolutely perfect vaccine at present. Among many kinds of vaccines, we need to choose vaccination according to the stage of the outbreak and the specific situation. We can adopt different strategies according to different modes to deal with the epidemic. With the change and development of the technological age, we think the new ideal types of vaccines could be invented in the near future.

6. Conclusion

By exploring and comparing the respective characteristics of live attenuated vaccines with mRNA vaccines, this paper demonstrates the characteristics of vaccines derived from different principles at the research, development and production level, as well as the advantages and problems in their clinical application. To solve the transmission and infection of COVID-19, and to minimize the harm to human groups in the initial stage, there are a complex number of known vaccine routes. This paper lists two common vaccines, through examples and comparison to understand the current COVID-19 vaccine can be improved space. Vaccines with different effector mechanisms can provide different research and development perspectives, and such diversity is beneficial for the possible mutations produced in the coronavirus. This paper hopes that readers can recognize the diversity of COVID-19 vaccines and the advantages and disadvantages of different vaccines. The improvements made by COVID-19 vaccines will bring great benefits to human society. Whether it is reducing the time and procedure of vaccine production, reducing its cost to facilitate the vaccine popularization, accelerating and enhancing the clinical effect capacity of the vaccine and enhancing its own practicability; reducing its vaccination requirements and reducing the possible side effects and age limit of the vaccine are all important steps in the development of COVID-19 vaccine developments. In the future, no one can predict whether COVID-19 will produce further mutation, and what impact it will have on humans, so it is very important to improve the COVID-19 vaccine and to track the latest changes in the virus. We can come to the phased conclusion that any vaccine is still in the development stage and that there are still many things that can be optimized and improved by themselves. There are still great differences between only live attenuated vaccines and mRNA vaccines, each with its relative advantages and disadvantages.

References

[1] Frutos, J. Serra-Cobo, L. Pinault, et al. emergence of Bat-Related Betacoronaviruses: Hazard and Risks. (*Frontiers in Microbiology*, 2021), **12**: pp.591535.

[2] J. Trimpert, J.M. Adler, K. Eschke, Live attenuated virus vaccine protects against sars-cov-2 variants of concern B.1.1.7 (Alpha) and b.1.351 (Beta). (*Science Advances, 2021*), **7(49)**: pp.0172.

[3] T. Liu, Y. Yang, and L. Huang. Development and delivery system of mRNA vaccines. (*Frontiers in Bioengineering and Biotechnology*, 2021), **9**: pp.718753.

[4] J. Pelletier, and N. Sonenberg. Insertion Mutagenesis to Increase Secondary Structure Within the 5' Noncoding Region of a Eukaryotic mRNA Reduces Translational Efficiency. (*Cell*, 1985),

DOI: 10.54254/2753-8818/3/20220268

40(3): pp.515-26.

[5] N. K. Gray, and M. Wickens. Control of translation initiation in animals. (*Animal Review of Cell and Developmental Biology*, 1998), **14**: pp.399-458.

[6] J. Trimpert, K. Dietert, T.C. Firsching, development of safe and highly protective live-attenuated sars-cov-2 vaccine candidates by genome recoding. (*Cell Reports*, 2021), **36**: pp.109493.

[7] S. Okamura, and H. Ebina. Could live attenuated vaccines better control COVID-19. (*Vaccine*, 2021), **39(39)**: pp.5719-26.

[8] K. Park, X. Sun, M. E. Aikins, and J. J. Moon. Non-viral COVID-19 vaccine delivery systems. *(Advanced drug delivery reviews*, 2021), **169**: pp.137-151.

[9] E. Bettini, and M. Locci. Sars-cov-2 mRNA vaccines: immunological mechanism and beyond. (*Vaccines*, 2021), **9(2)**: pp.147.

[10] M. J. Mulligan, K. E. Lyke, N. Kitchin, Phase I/II study of COVID-19 RNA vaccine BNT162b1 in adults. (*Nature*, 2020), **586(7830)**: pp.589-593.